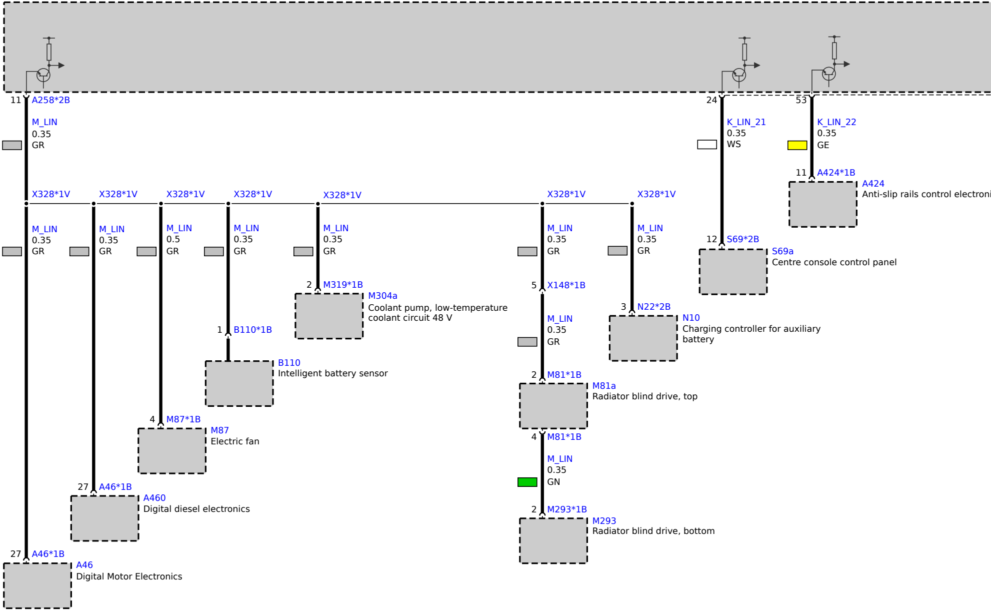
11
A258*2B
M_LIN
0.35
GR
24
K_LIN_21
0.35
WS
53
K_LIN_22
0.35
GE
11
A424*1B
A424
Anti-slip rails control electroni
X328*1V
X328*1V
X328*1V
X328*1V
X328*1V
X328*1V
X328*1V
M_LIN
0.35
GR
M_LIN
0.35
GR
M_LIN
0.5
GR
M_LIN
0.35
GR
M_LIN
0.35
GR
M_LIN
0.35
GR
M_LIN
0.35
GR
12
S69*2B
S69a
Centre console control panel
2
M319*1B
M304a
Coolant pump, low-temperature coolant circuit 48 V
5
X148*1B
3
N22*2B
N10
Charging controller for auxiliary battery
1
B110*1B
M_LIN
0.35
GR
B110
Intelligent battery sensor
2
M81*1B
M81a
Radiator blind drive, top
4
M87*1B
M87
Electric fan
4
M81*1B
M_LIN
0.35
GN
27
A46*1B
A460
Digital diesel electronics
2
M293*1B
M293
Radiator blind drive, bottom
27
A46*1B
A46
Digital Motor Electronics

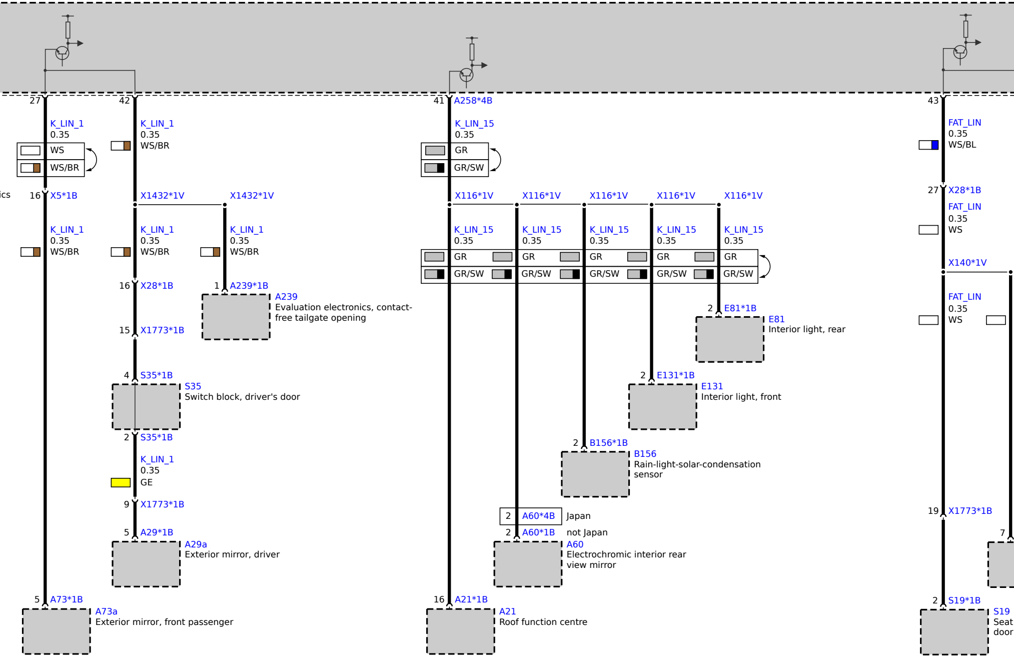
27
42
41
A258*4B
43
K_LIN_1
0.35
WS
WS/BR
K_LIN_1
0.35
WS/BR
K_LIN_15
0.35
GR
GR/SW
FAT_LIN
0.35
WS/BL
ics
16
X5*1B
X1432*1V
X1432*1V
X116*1V
X116*1V
X116*1V
X116*1V
X116*1V
27
X28*1B
FAT_LIN
0.35
WS
K_LIN_1
0.35
WS/BR
K_LIN_1
0.35
WS/BR
K_LIN_1
0.35
WS/BR
K_LIN_15
0.35
K_LIN_15
0.35
K_LIN_15
0.35
K_LIN_15
0.35
K_LIN_15
0.35
GR
GR
GR
GR
GR
GR/SW
GR/SW
GR/SW
GR/SW
GR/SW
X140*1V
16
X28*1B
1
A239*1B
A239
Evaluation electronics, contact-free tailgate opening
2
E81*1B
E81
Interior light, rear
FAT_LIN
0.35
WS
15
X1773*1B
4
S35*1B
S35
Switch block, driver's door
2
E131*1B
E131
Interior light, front
2
S35*1B
2
B156*1B
B156
Rain-light-solar-condensation sensor
K_LIN_1
0.35
GE
9
X1773*1B
2
A60*4B
Japan
2
A60*1B
not Japan
A60
Electrochromic interior rear view mirror
19
X1773*1B
5
A29*1B
A29a
Exterior mirror, driver
7
5
A73*1B
A73a
Exterior mirror, front passenger
16
A21*1B
A21
Roof function centre
2
S19*1B
S19
Seat
door

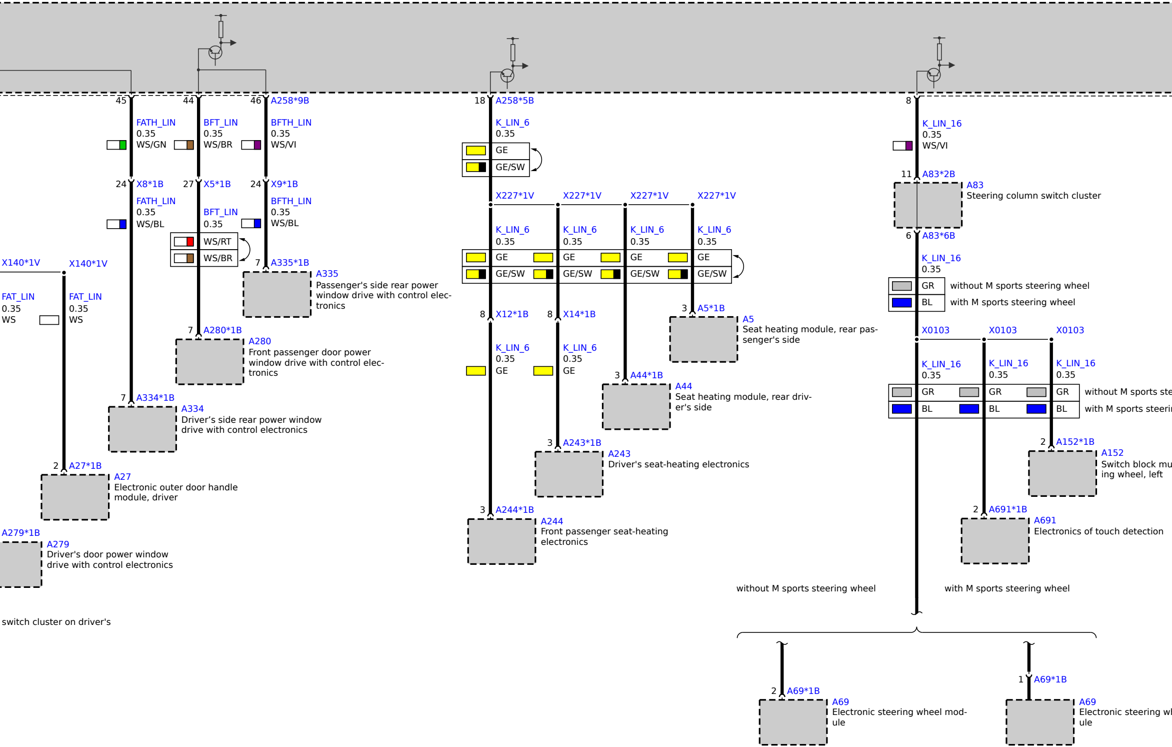
45
44
46
A258*9B
FATH_LIN
0.35
WS/GN
BFT_LIN
0.35
WS/BR
BFTH_LIN
0.35
WS/VI
24
X8*1B
27
X5*1B
24
X9*1B
FATH_LIN
0.35
WS/BL
BFT_LIN
0.35
WS/RT
WS/BR
BFTH_LIN
0.35
WS/BL
X140*1V
X140*1V
FAT_LIN
0.35
WS
FAT_LIN
0.35
WS
7
A335*1B
A335
Passenger's side rear power window drive with control electronics
7
A280*1B
A280
Front passenger door power window drive with control electronics
7
A334*1B
A334
Driver's side rear power window drive with control electronics
2
A27*1B
A27
Electronic outer door handle module, driver
A279*1B
A279
Driver's door power window drive with control electronics
switch cluster on driver's
18
A258*5B
K_LIN_6
0.35
GE
GE/SW
X227*1V
X227*1V
X227*1V
X227*1V
K_LIN_6
0.35
K_LIN_6
0.35
K_LIN_6
0.35
K_LIN_6
0.35
GE
GE
GE
GE
GE/SW
GE/SW
GE/SW
GE/SW
8
X12*1B
8
X14*1B
3
A5*1B
A5
Seat heating module, rear passenger's side
K_LIN_6
0.35
GE
K_LIN_6
0.35
GE
3
A44*1B
A44
Seat heating module, rear driver's side
3
A243*1B
A243
Driver's seat-heating electronics
3
A244*1B
A244
Front passenger seat-heating electronics
8
K_LIN_16
0.35
WS/VI
11
A83*2B
A83
Steering column switch cluster
6
A83*6B
K_LIN_16
0.35
GR
without M sports steering wheel
BL
with M sports steering wheel
X0103
X0103
X0103
K_LIN_16
0.35
K_LIN_16
0.35
K_LIN_16
0.35
GR
GR
GR
without M sports ste
BL
BL
BL
with M sports steerin
2
A152*1B
A152
Switch block mu
ing wheel, left
2
A691*1B
A691
Electronics of touch detection
without M sports steering wheel
with M sports steering wheel
2
A69*1B
A69
Electronic steering wheel module
1
A69*1B
A69
Electronic steering wh
ule

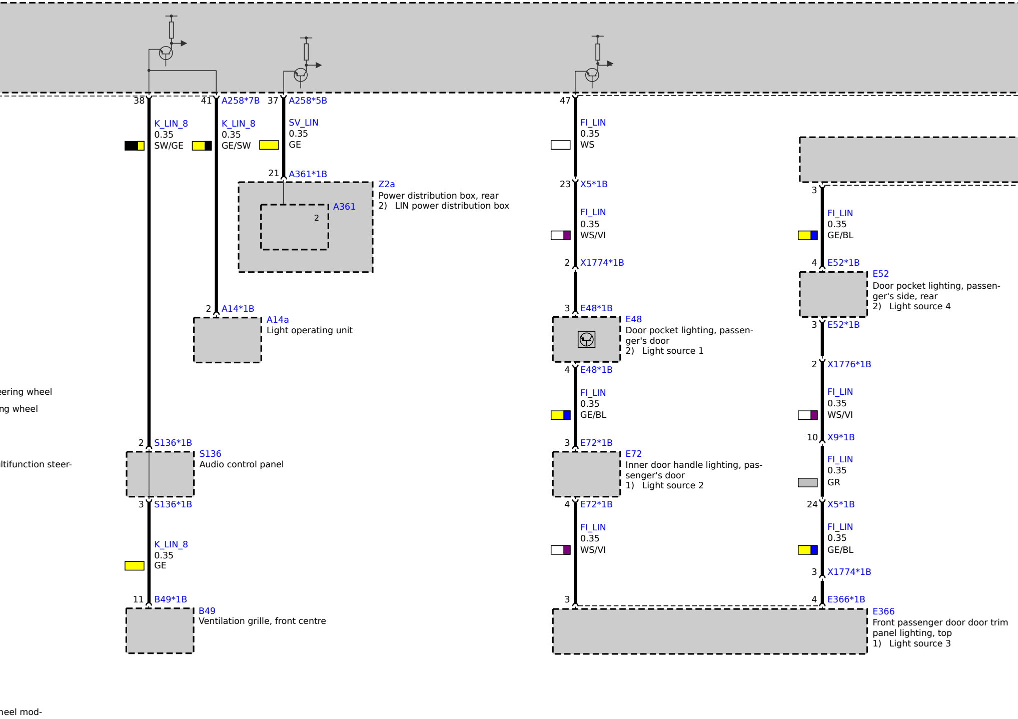
38
41
A258*7B
37
A258*5B
47
K_LIN_8
0.35
SW/GE
K_LIN_8
0.35
GE/SW
SV_LIN
0.35
GE
FI_LIN
0.35
WS
21
A361*1B
Z2a
Power distribution box, rear
2) LIN power distribution box
A361
2
23
X5*1B
3
FI_LIN
0.35
WS/VI
FI_LIN
0.35
GE/BL
2
X1774*1B
4
E52*1B
E52
Door pocket lighting, passenger's side, rear
2) Light source 4
2
A14*1B
A14a
Light operating unit
3
E48*1B
E48
Door pocket lighting, passenger's door
2) Light source 1
3
E52*1B
4
E48*1B
2
X1776*1B
eering wheel
ng wheel
FI_LIN
0.35
GE/BL
FI_LIN
0.35
WS/VI
10
X9*1B
2
S136*1B
3
E72*1B
S136
Audio control panel
E72
Inner door handle lighting, passenger's door
1) Light source 2
ltifunction steer-
FI_LIN
0.35
GR
3
S136*1B
4
E72*1B
24
X5*1B
K_LIN_8
0.35
GE
FI_LIN
0.35
WS/VI
FI_LIN
0.35
GE/BL
3
X1774*1B
11
B49*1B
3
4
E366*1B
B49
Ventilation grille, front centre
E366
Front passenger door door trim panel lighting, top
1) Light source 3
heel mod-

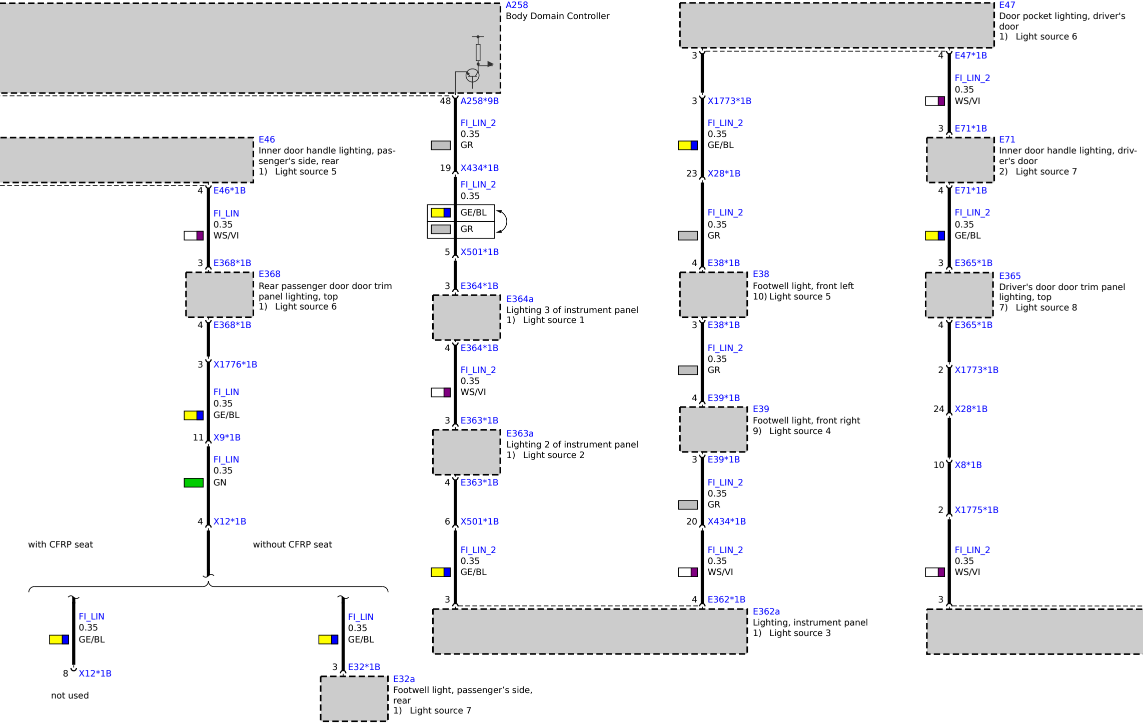
A258
Body Domain Controller
48 A258*9B
FI_LIN_2
0.35
GR
19 X434*1B
FI_LIN_2
0.35
GE/BL
GR
5 X501*1B
3 E364*1B
E364a
Lighting 3 of instrument panel
1) Light source 1
4 E364*1B
FI_LIN_2
0.35
WS/VI
3 E363*1B
E363a
Lighting 2 of instrument panel
1) Light source 2
4 E363*1B
6 X501*1B
FI_LIN_2
0.35
GE/BL
3
E46
Inner door handle lighting, passenger's side, rear
1) Light source 5
4 E46*1B
FI_LIN
0.35
WS/VI
3 E368*1B
E368
Rear passenger door door trim panel lighting, top
1) Light source 6
4 E368*1B
3 X1776*1B
FI_LIN
0.35
GE/BL
11 X9*1B
FI_LIN
0.35
GN
4 X12*1B
with CFRP seat
without CFRP seat
FI_LIN
0.35
GE/BL
8 X12*1B
not used
FI_LIN
0.35
GE/BL
3 E32*1B
E32a
Footwell light, passenger’s side, rear
1) Light source 7
E47
Door pocket lighting, driver's door
1) Light source 6
3
3 X1773*1B
FI_LIN_2
0.35
GE/BL
23 X28*1B
FI_LIN_2
0.35
GR
4 E38*1B
E38
Footwell light, front left
10) Light source 5
3 E38*1B
FI_LIN_2
0.35
GR
4 E39*1B
E39
Footwell light, front right
9) Light source 4
3 E39*1B
FI_LIN_2
0.35
GR
20 X434*1B
FI_LIN_2
0.35
WS/VI
4 E362*1B
E362a
Lighting, instrument panel
1) Light source 3
4 E47*1B
FI_LIN_2
0.35
WS/VI
3 E71*1B
E71
Inner door handle lighting, driver's door
2) Light source 7
4 E71*1B
FI_LIN_2
0.35
GE/BL
3 E365*1B
E365
Driver's door door trim panel lighting, top
7) Light source 8
4 E365*1B
2 X1773*1B
24 X28*1B
10 X8*1B
2 X1775*1B
FI_LIN_2
0.35
WS/VI
3

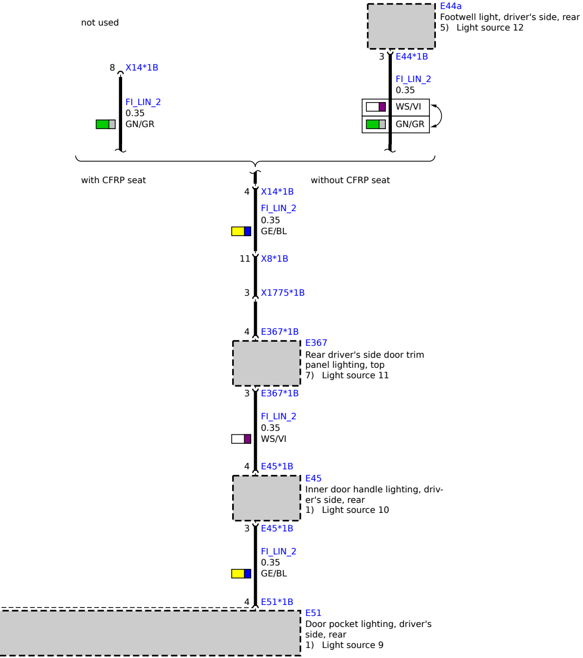
not used
E44a
Footwell light, driver's side, rear
5) Light source 12
3
E44*1B
FI_LIN_2
0.35
WS/VI
GN/GR
8
X14*1B
FI_LIN_2
0.35
GN/GR
with CFRP seat
without CFRP seat
4
X14*1B
FI_LIN_2
0.35
GE/BL
11
X8*1B
3
X1775*1B
4
E367*1B
E367
Rear driver's side door trim panel lighting, top
7) Light source 11
3
E367*1B
FI_LIN_2
0.35
WS/VI
4
E45*1B
E45
Inner door handle lighting, driver's side, rear
1) Light source 10
3
E45*1B
FI_LIN_2
0.35
GE/BL
4
E51*1B
E51
Door pocket lighting, driver's side, rear
1) Light source 9