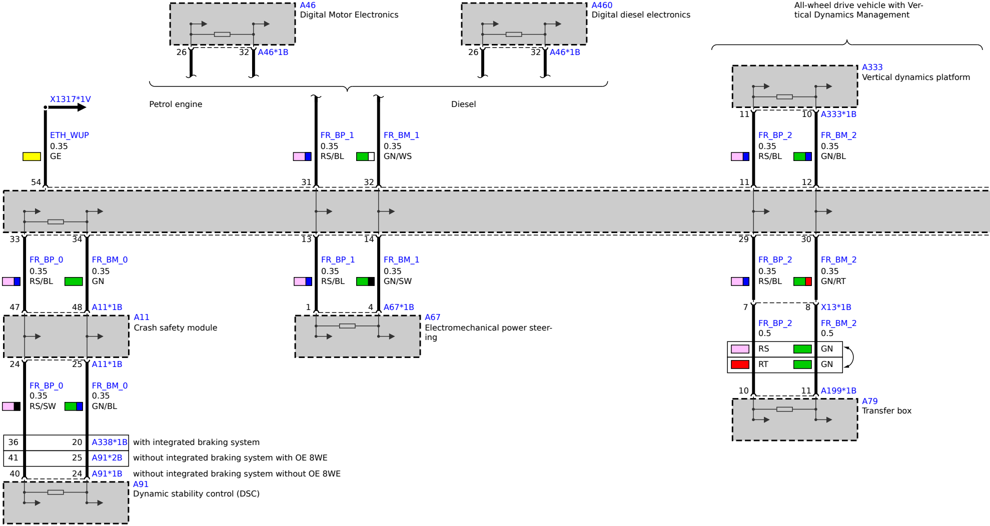
A46
Digital Motor Electronics
26
32
A46*1B
A460
Digital diesel electronics
26
32
A46*1B
All-wheel drive vehicle with Vertical Dynamics Management
A333
Vertical dynamics platform
11
10
A333*1B
Petrol engine
Diesel
X1317*1V
ETH_WUP
0.35
GE
54
FR_BP_1
0.35
RS/BL
31
FR_BM_1
0.35
GN/WS
32
FR_BP_2
0.35
RS/BL
11
FR_BM_2
0.35
GN/BL
12
33
34
FR_BP_0
0.35
RS/BL
FR_BM_0
0.35
GN
47
48
A11*1B
13
14
FR_BP_1
0.35
RS/BL
FR_BM_1
0.35
GN/SW
1
4
A67*1B
29
30
FR_BP_2
0.35
RS/BL
FR_BM_2
0.35
GN/RT
7
8
X13*1B
A11
Crash safety module
A67
Electromechanical power steering
FR_BP_2
0.5
FR_BM_2
0.5
RS
GN
RT
GN
24
25
A11*1B
10
11
A199*1B
A79
Transfer box
FR_BP_0
0.35
RS/SW
FR_BM_0
0.35
GN/BL
36
20
A338*1B
with integrated braking system
41
25
A91*2B
without integrated braking system with OE 8WE
40
24
A91*1B
without integrated braking system without OE 8WE
A91
Dynamic stability control (DSC)

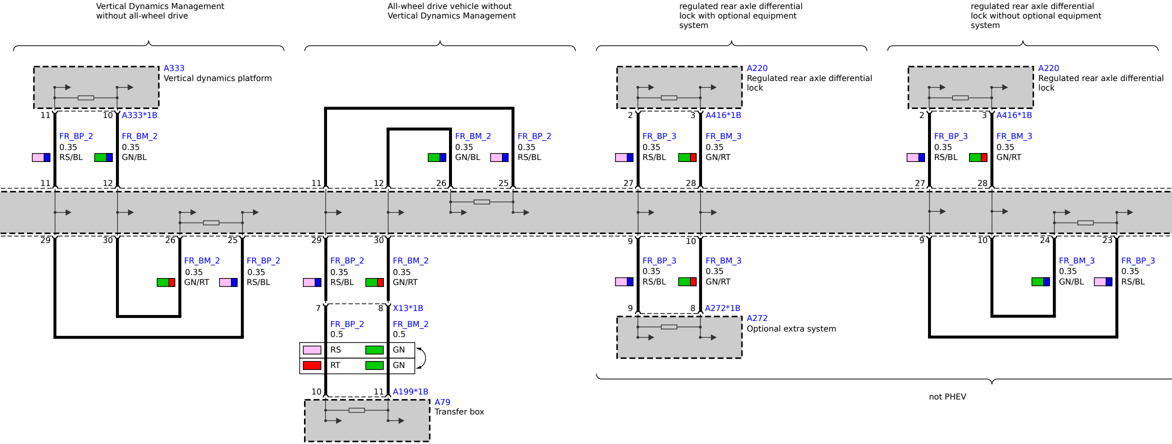
Vertical Dynamics Management without all-wheel drive
All-wheel drive vehicle without Vertical Dynamics Management
regulated rear axle differential lock with optional equipment system
regulated rear axle differential lock without optional equipment system
A333
Vertical dynamics platform
11
10
A333*1B
FR_BP_2
0.35
RS/BL
FR_BM_2
0.35
GN/BL
11
12
29
30
26
25
FR_BM_2
0.35
GN/RT
FR_BP_2
0.35
RS/BL
11
12
26
25
FR_BM_2
0.35
GN/BL
FR_BP_2
0.35
RS/BL
29
30
FR_BP_2
0.35
RS/BL
FR_BM_2
0.35
GN/RT
7
8
X13*1B
FR_BP_2
0.5
FR_BM_2
0.5
RS
GN
RT
GN
10
11
A199*1B
A79
Transfer box
A220
Regulated rear axle differential lock
2
3
A416*1B
FR_BP_3
0.35
RS/BL
FR_BM_3
0.35
GN/RT
27
28
9
10
FR_BP_3
0.35
RS/BL
FR_BM_3
0.35
GN/RT
9
8
A272*1B
A272
Optional extra system
A220
Regulated rear axle differential lock
2
3
A416*1B
FR_BP_3
0.35
RS/BL
FR_BM_3
0.35
GN/RT
27
28
9
10
24
23
FR_BM_3
0.35
GN/BL
FR_BP_3
0.35
RS/BL
not PHEV

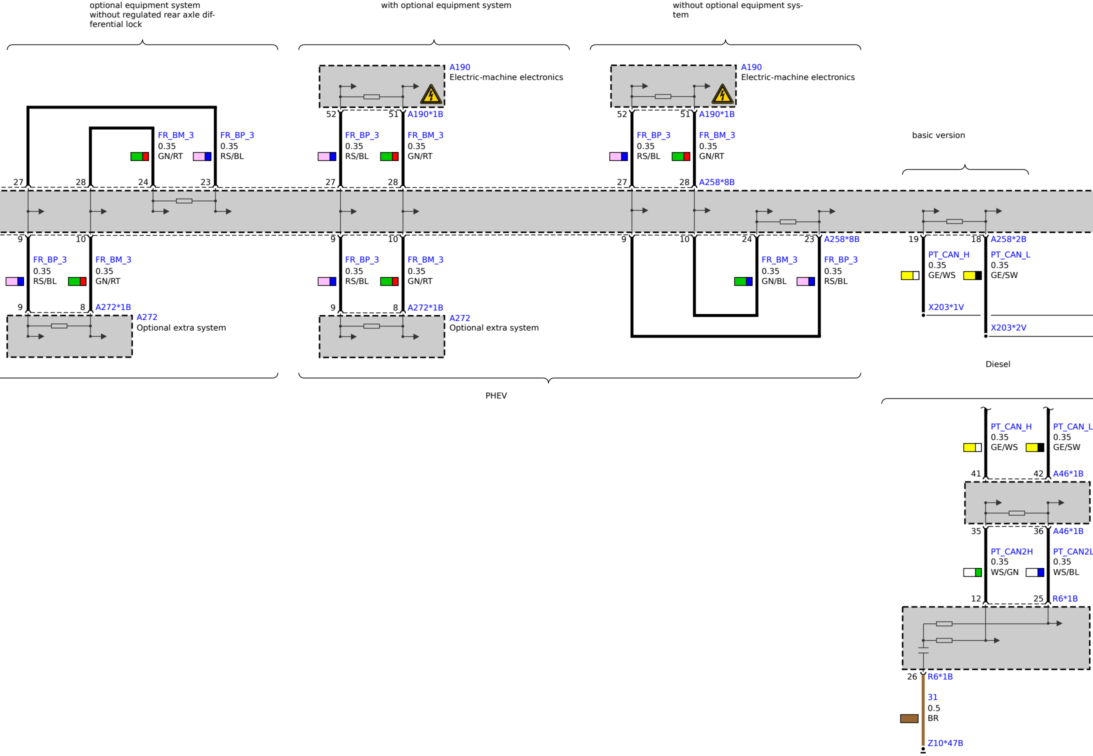
optional equipment system without regulated rear axle differential lock
with optional equipment system
without optional equipment system
basic version
A190
Electric-machine electronics
A190*1B
52
51
A190
Electric-machine electronics
A190*1B
52
51
FR_BM_3
0.35
GN/RT
FR_BP_3
0.35
RS/BL
FR_BP_3
0.35
RS/BL
FR_BM_3
0.35
GN/RT
FR_BP_3
0.35
RS/BL
FR_BM_3
0.35
GN/RT
27
28
24
23
27
28
27
28
A258*8B
9
10
9
10
9
10
24
23
A258*8B
19
18
A258*2B
FR_BP_3
0.35
RS/BL
FR_BM_3
0.35
GN/RT
FR_BP_3
0.35
RS/BL
FR_BM_3
0.35
GN/RT
FR_BM_3
0.35
GN/BL
FR_BP_3
0.35
RS/BL
PT_CAN_H
0.35
GE/WS
PT_CAN_L
0.35
GE/SW
9
8
A272*1B
9
8
A272*1B
X203*1V
X203*2V
A272
Optional extra system
A272
Optional extra system
Diesel
PHEV
PT_CAN_H
0.35
GE/WS
PT_CAN_L
0.35
GE/SW
41
42
A46*1B
35
36
A46*1B
PT_CAN2H
0.35
WS/GN
PT_CAN2L
0.35
WS/BL
12
25
R6*1B
26
R6*1B
31
0.5
BR
Z10*47B

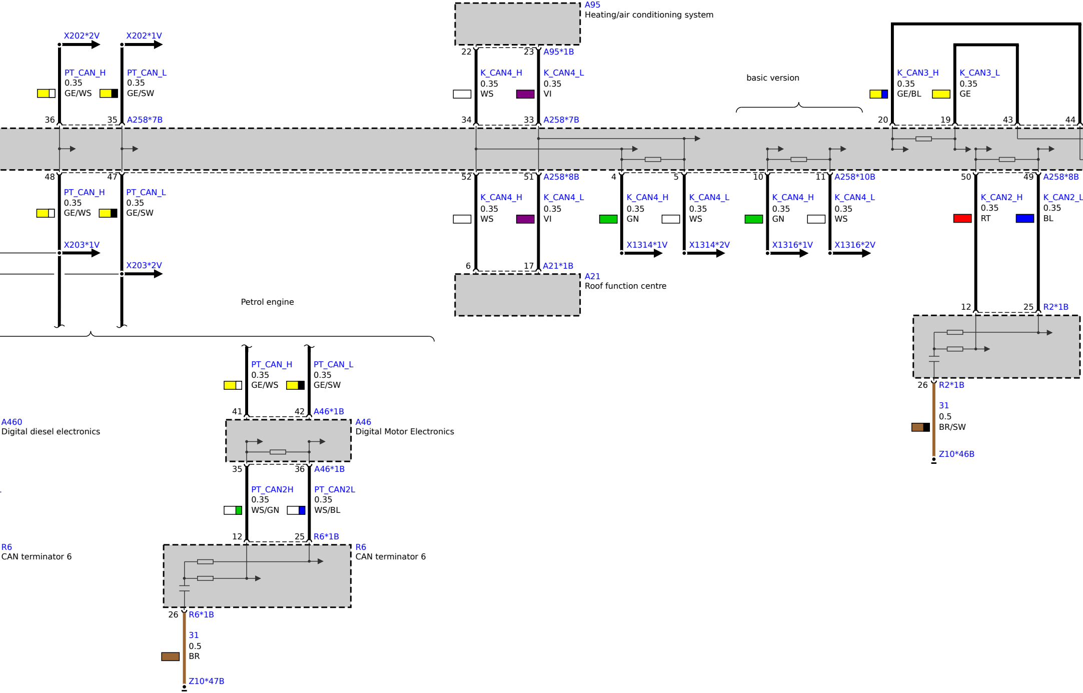

A95
Heating/air conditioning system
22
23
A95*1B
K_CAN4_H
0.35
WS
K_CAN4_L
0.35
VI
34
33
A258*7B
basic version
K_CAN3_H
0.35
GE/BL
K_CAN3_L
0.35
GE
20
19
43
44
X202*2V
X202*1V
PT_CAN_H
0.35
GE/WS
PT_CAN_L
0.35
GE/SW
36
35
A258*7B
48
47
52
51
A258*8B
4
5
10
11
A258*10B
50
49
A258*8B
PT_CAN_H
0.35
GE/WS
PT_CAN_L
0.35
GE/SW
X203*1V
X203*2V
K_CAN4_H
0.35
WS
K_CAN4_L
0.35
VI
6
17
A21*1B
A21
Roof function centre
K_CAN4_H
0.35
GN
K_CAN4_L
0.35
WS
X1314*1V
X1314*2V
K_CAN4_H
0.35
GN
K_CAN4_L
0.35
WS
X1316*1V
X1316*2V
K_CAN2_H
0.35
RT
K_CAN2_L
0.35
BL
12
25
R2*1B
26
R2*1B
31
0.5
BR/SW
Z10*46B
Petrol engine
PT_CAN_H
0.35
GE/WS
PT_CAN_L
0.35
GE/SW
41
42
A46*1B
A460
Digital diesel electronics
A46
Digital Motor Electronics
35
36
A46*1B
PT_CAN2H
0.35
WS/GN
PT_CAN2L
0.35
WS/BL
12
25
R6*1B
R6
CAN terminator 6
R6
CAN terminator 6
26
R6*1B
31
0.5
BR
Z10*47B

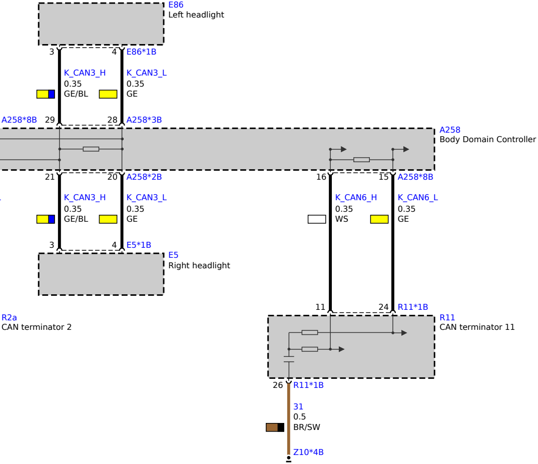
E86
Left headlight
3
4
E86*1B
K_CAN3_H
0.35
GE/BL
K_CAN3_L
0.35
GE
A258*8B
29
28
A258*3B
A258
Body Domain Controller
21
20
A258*2B
16
15
A258*8B
K_CAN3_H
0.35
GE/BL
K_CAN3_L
0.35
GE
K_CAN6_H
0.35
WS
K_CAN6_L
0.35
GE
3
4
E5*1B
E5
Right headlight
R2a
CAN terminator 2
11
24
R11*1B
R11
CAN terminator 11
26
R11*1B
31
0.5
BR/SW
Z10*4B