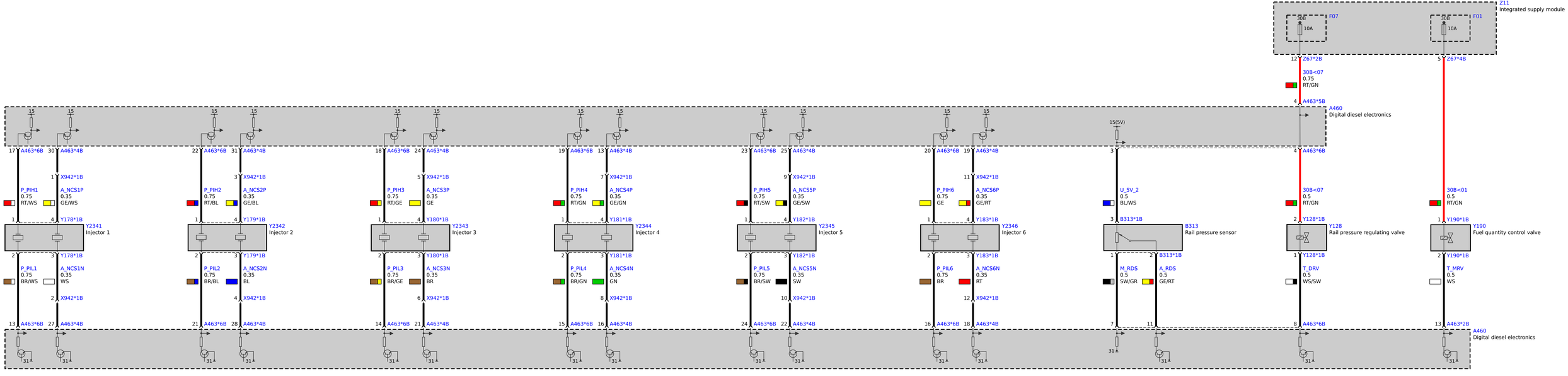
Z11
Integrated supply module
30B
10A
F07
F01
12 Z67*2B
5 Z67*4B
30B<07
0.75
RT/GN
4 A463*5B
A460
Digital diesel electronics
15
15(5V)
17 A463*6B
30 A463*4B
1 X942*1B
P_PIH1
0.75
RT/WS
A_NCS1P
0.35
GE/WS
1
4 Y178*1B
Y2341
Injector 1
2
3 Y178*1B
P_PIL1
0.75
BR/WS
A_NCS1N
0.35
WS
2 X942*1B
13 A463*6B
27 A463*4B
22 A463*6B
31 A463*4B
3 X942*1B
P_PIH2
0.75
RT/BL
A_NCS2P
0.35
GE/BL
4 Y179*1B
Y2342
Injector 2
3 Y179*1B
P_PIL2
0.75
BR/BL
A_NCS2N
0.35
BL
4 X942*1B
21 A463*6B
28 A463*4B
18 A463*6B
24 A463*4B
5 X942*1B
P_PIH3
0.75
RT/GE
A_NCS3P
0.35
GE
4 Y180*1B
Y2343
Injector 3
3 Y180*1B
P_PIL3
0.75
BR/GE
A_NCS3N
0.35
BR
6 X942*1B
14 A463*6B
21 A463*4B
19 A463*6B
13 A463*4B
7 X942*1B
P_PIH4
0.75
RT/GN
A_NCS4P
0.35
GE/GN
4 Y181*1B
Y2344
Injector 4
3 Y181*1B
P_PIL4
0.75
BR/GN
A_NCS4N
0.35
GN
8 X942*1B
15 A463*6B
16 A463*4B
23 A463*6B
25 A463*4B
9 X942*1B
P_PIH5
0.75
RT/SW
A_NCS5P
0.35
GE/SW
4 Y182*1B
Y2345
Injector 5
3 Y182*1B
P_PIL5
0.75
BR/SW
A_NCS5N
0.35
SW
10 X942*1B
24 A463*6B
22 A463*4B
20 A463*6B
19 A463*4B
11 X942*1B
P_PIH6
0.75
GE
A_NCS6P
0.35
GE/RT
4 Y183*1B
Y2346
Injector 6
3 Y183*1B
P_PIL6
0.75
BR
A_NCS6N
0.35
RT
12 X942*1B
16 A463*6B
18 A463*4B
3
U_5V_2
0.5
BL/WS
3 B313*1B
B313
Rail pressure sensor
1
2 B313*1B
M_RDS
0.5
SW/GR
A_RDS
0.5
GE/RT
7
11
4 A463*6B
30B<07
0.5
RT/GN
2 Y128*1B
Y128
Rail pressure regulating valve
1 Y128*1B
T_DRV
0.5
WS/SW
8 A463*6B
30B<01
0.5
RT/GN
1 Y190*1B
Y190
Fuel quantity control valve
2 Y190*1B
T_MRV
0.5
WS
13 A463*2B
A460
Digital diesel electronics
31