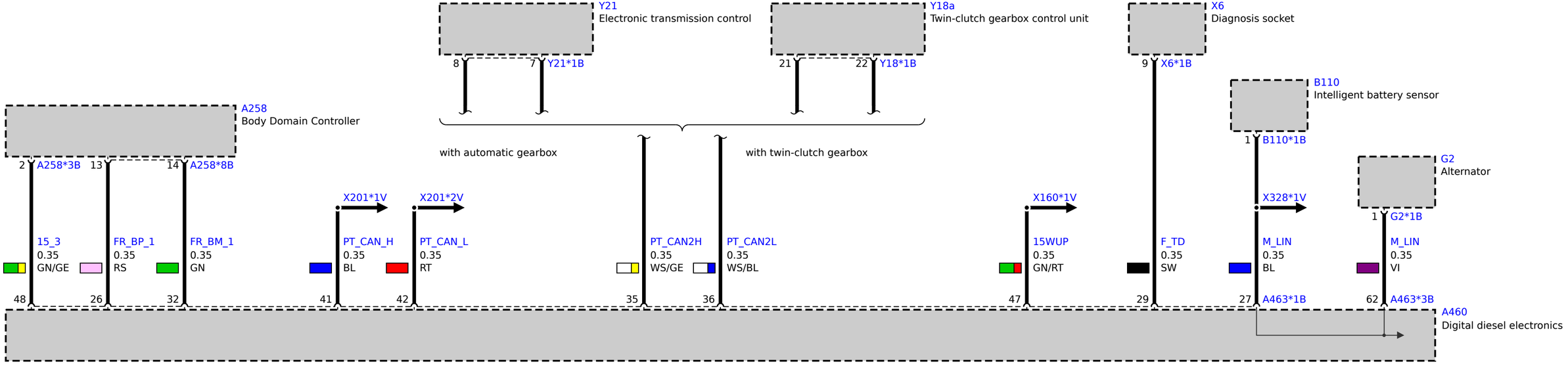
Y21
Electronic transmission control
Y18a
Twin-clutch gearbox control unit
X6
Diagnosis socket
8
7
Y21*1B
21
22
Y18*1B
9
X6*1B
B110
Intelligent battery sensor
1
B110*1B
A258
Body Domain Controller
with automatic gearbox
with twin-clutch gearbox
G2
Alternator
2
A258*3B
13
14
A258*8B
X201*1V
X201*2V
X160*1V
X328*1V
1
G2*1B
15_3
0.35
GN/GE
FR_BP_1
0.35
RS
FR_BM_1
0.35
GN
PT_CAN_H
0.35
BL
PT_CAN_L
0.35
RT
PT_CAN2H
0.35
WS/GE
PT_CAN2L
0.35
WS/BL
15WUP
0.35
GN/RT
F_TD
0.35
SW
M_LIN
0.35
BL
M_LIN
0.35
VI
48
26
32
41
42
35
36
47
29
27
A463*1B
62
A463*3B
A460
Digital diesel electronics