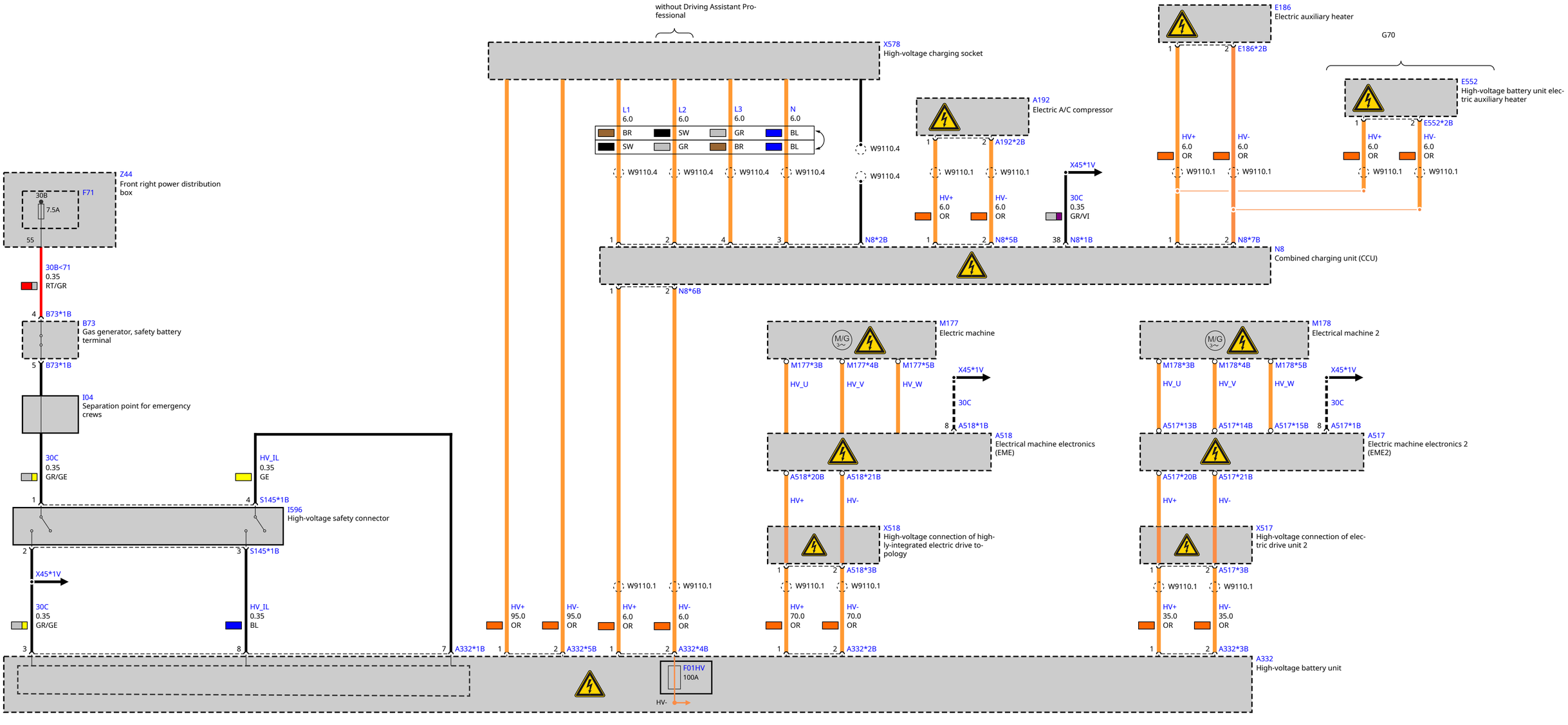
without Driving Assistant Professional
X578
High-voltage charging socket
L1 6.0
L2 6.0
L3 6.0
N 6.0
BR SW GR BL
SW GR BR BL
W9110.4
N8*2B
A192
Electric A/C compressor
A192*2B
W9110.1
HV+ 6.0 OR
HV- 6.0 OR
N8*5B
X45*1V
30C 0.35 GR/VI
N8*1B
E186
Electric auxiliary heater
E186*2B
N8*7B
G70
E552
High-voltage battery unit electric auxiliary heater
E552*2B
N8
Combined charging unit (CCU)
N8*6B
Z44
Front right power distribution box
F71
30B
7.5A
55
30B<71
0.35
RT/GR
B73*1B
B73
Gas generator, safety battery terminal
I04
Separation point for emergency crews
30C
0.35
GR/GE
HV_IL
0.35
GE
S145*1B
I596
High-voltage safety connector
HV_IL
0.35
BL
A332*1B
HV+ 95.0 OR
HV- 95.0 OR
A332*5B
HV+ 6.0 OR
HV- 6.0 OR
A332*4B
M177
Electric machine
M177*3B
M177*4B
M177*5B
HV_U
HV_V
HV_W
A518*1B
A518
Electrical machine electronics (EME)
A518*20B
A518*21B
HV+
HV-
X518
High-voltage connection of highly-integrated electric drive topology
A518*3B
HV+ 70.0 OR
HV- 70.0 OR
A332*2B
M178
Electrical machine 2
M178*3B
M178*4B
M178*5B
A517*1B
A517
Electric machine electronics 2 (EME2)
A517*13B
A517*14B
A517*15B
A517*20B
A517*21B
X517
High-voltage connection of electric drive unit 2
A517*3B
HV+ 35.0 OR
HV- 35.0 OR
A332*3B
A332
High-voltage battery unit
F01HV
100A
HV-