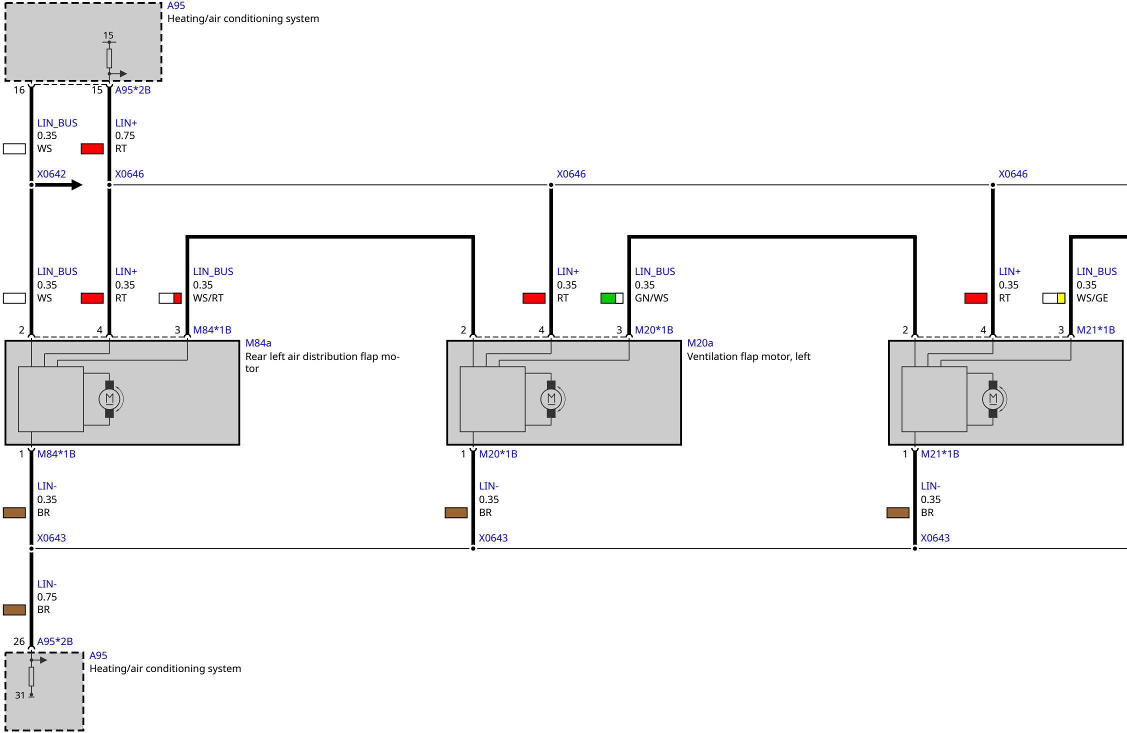
A95
Heating/air conditioning system
15
16
15
A95*2B
LIN_BUS
0.35
WS
LIN+
0.75
RT
X0642
X0646
X0646
X0646
LIN_BUS
0.35
WS
LIN+
0.35
RT
LIN_BUS
0.35
WS/RT
LIN+
0.35
RT
LIN_BUS
0.35
GN/WS
LIN+
0.35
RT
LIN_BUS
0.35
WS/GE
2
4
3
M84*1B
M84a
Rear left air distribution flap motor
2
4
3
M20*1B
M20a
Ventilation flap motor, left
2
4
3
M21*1B
M
M
M
1
M84*1B
1
M20*1B
1
M21*1B
LIN-
0.35
BR
LIN-
0.35
BR
LIN-
0.35
BR
X0643
X0643
X0643
LIN-
0.75
BR
26
A95*2B
A95
Heating/air conditioning system
31

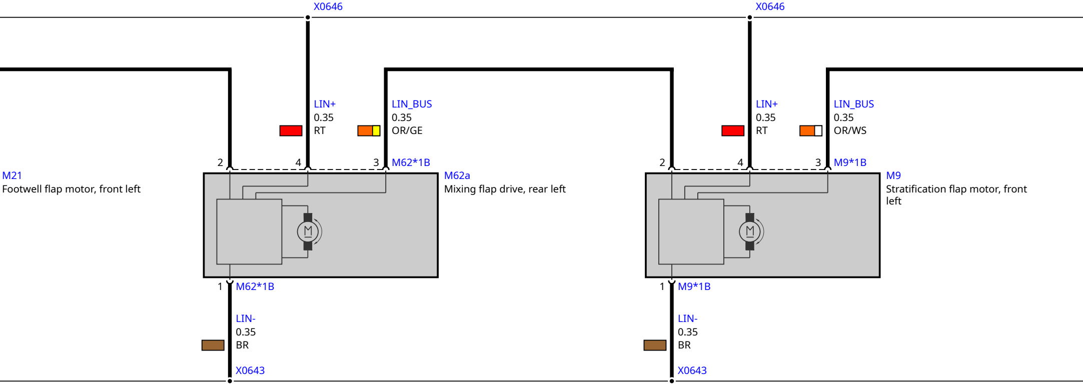
X0646
X0646
LIN+
0.35
RT
LIN_BUS
0.35
OR/GE
LIN+
0.35
RT
LIN_BUS
0.35
OR/WS
2
4
3
M62*1B
2
4
3
M9*1B
M21
Footwell flap motor, front left
M62a
Mixing flap drive, rear left
M9
Stratification flap motor, front left
M
M
1
M62*1B
1
M9*1B
LIN-
0.35
BR
LIN-
0.35
BR
X0643
X0643

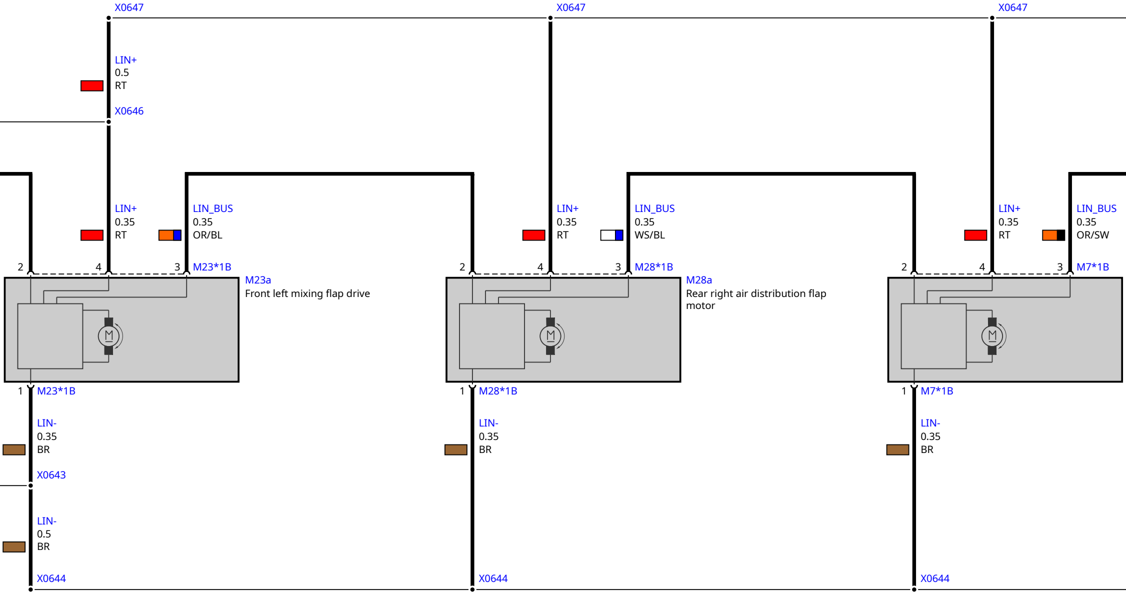
X0647
X0647
X0647
LIN+
0.5
RT
X0646
LIN+
0.35
RT
LIN_BUS
0.35
OR/BL
LIN+
0.35
RT
LIN_BUS
0.35
WS/BL
LIN+
0.35
RT
LIN_BUS
0.35
OR/SW
2
4
3
M23*1B
M23a
Front left mixing flap drive
2
4
3
M28*1B
M28a
Rear right air distribution flap motor
2
4
3
M7*1B
M
M
M
1
M23*1B
1
M28*1B
1
M7*1B
LIN-
0.35
BR
X0643
LIN-
0.5
BR
X0644
LIN-
0.35
BR
X0644
LIN-
0.35
BR
X0644

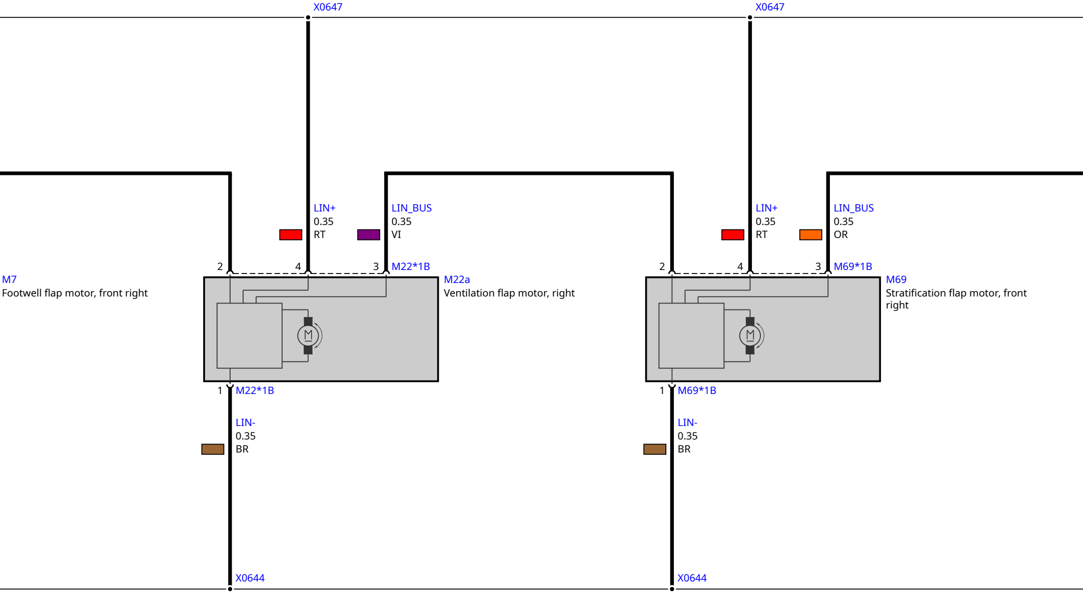
X0647
X0647
LIN+
0.35
RT
LIN_BUS
0.35
VI
LIN+
0.35
RT
LIN_BUS
0.35
OR
2
4
3
M22*1B
2
4
3
M69*1B
M7
Footwell flap motor, front right
M22a
Ventilation flap motor, right
M69
Stratification flap motor, front right
1
M22*1B
1
M69*1B
LIN-
0.35
BR
LIN-
0.35
BR
X0644
X0644

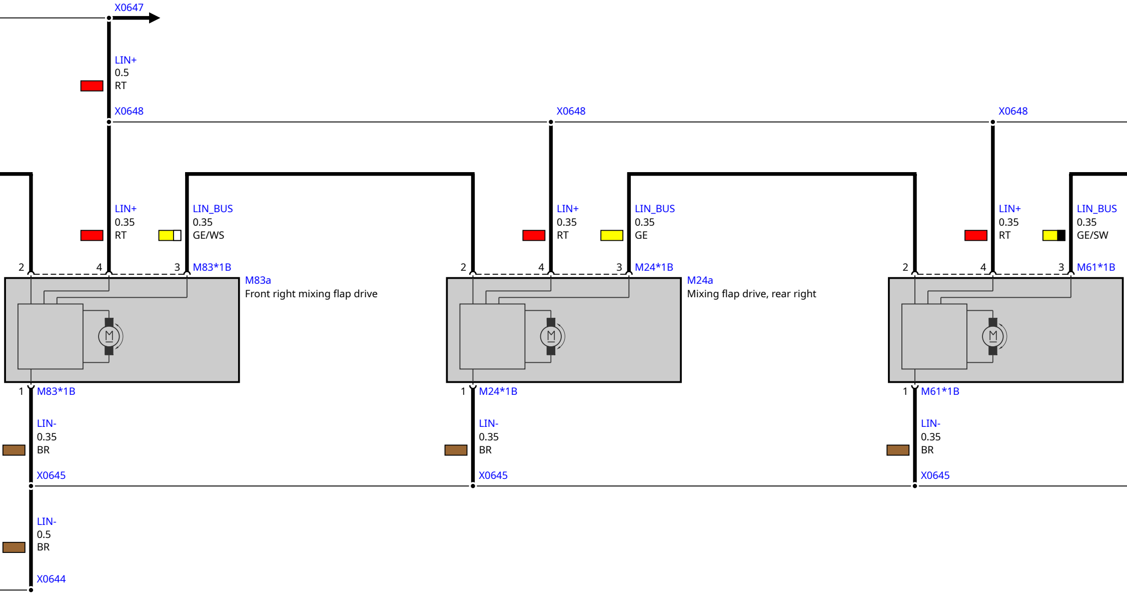
X0647
LIN+
0.5
RT
X0648
X0648
X0648
LIN+
0.35
RT
LIN_BUS
0.35
GE/WS
2
4
3
M83*1B
M83a
Front right mixing flap drive
M
1
M83*1B
LIN-
0.35
BR
X0645
LIN-
0.5
BR
X0644
LIN+
0.35
RT
LIN_BUS
0.35
GE
2
4
3
M24*1B
M24a
Mixing flap drive, rear right
M
1
M24*1B
LIN-
0.35
BR
X0645
LIN+
0.35
RT
LIN_BUS
0.35
GE/SW
2
4
3
M61*1B
M
1
M61*1B
LIN-
0.35
BR
X0645

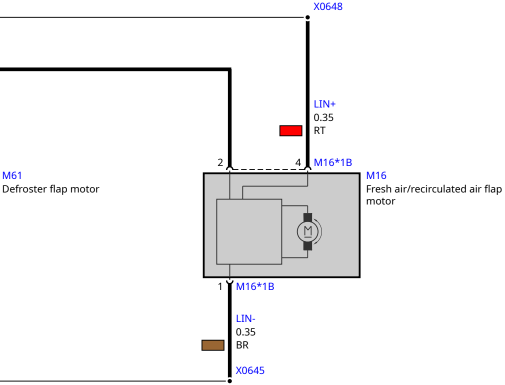
X0648
LIN+
0.35
RT
2
4
M16*1B
M61
Defroster flap motor
M16
Fresh air/recirculated air flap motor
M
1
M16*1B
LIN-
0.35
BR
X0645