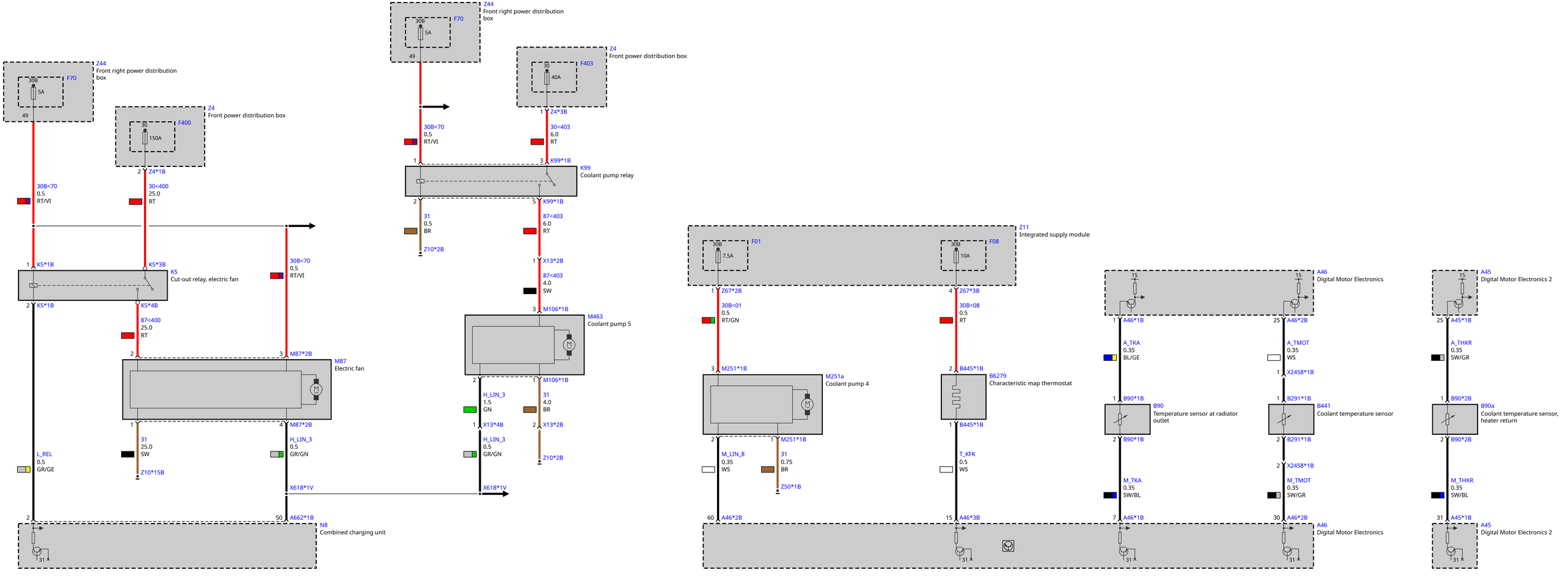
Z44
Front right power distribution box
F70
30B
5A
49
Z4
Front power distribution box
F400
30
150A
2 Z4*1B
30B<70
0.5
RT/VI
30<400
25.0
RT
1 K5*1B
K5*3B
K5
Cut-out relay, electric fan
2 K5*1B
K5*4B
87<400
25.0
RT
30B<70
0.5
RT/VI
2
3 M87*2B
M87
Electric fan
1
4 M87*2B
31
25.0
SW
Z10*15B
H_LIN_3
0.5
GR/GN
L_REL
0.5
GR/GE
X618*1V
2
50 A662*1B
N8
Combined charging unit
31
Z44
Front right power distribution box
F70
30B
5A
49
30B<70
0.5
RT/VI
1
Z4
Front power distribution box
F403
30
40A
1 Z4*3B
30<403
6.0
RT
3 K99*1B
K99
Coolant pump relay
2
5 K99*1B
31
0.5
BR
Z10*2B
87<403
6.0
RT
1 X13*2B
87<403
4.0
SW
3 M106*1B
M463
Coolant pump 5
2
1 M106*1B
H_LIN_3
1.5
GN
31
4.0
BR
1 X13*4B
2 X13*2B
H_LIN_3
0.5
GR/GN
Z10*2B
X618*1V
Z11
Integrated supply module
F01
30B
7.5A
F08
30B
10A
1 Z67*2B
4 Z67*3B
30B<01
0.5
RT/GN
30B<08
0.5
RT
3 M251*1B
M251a
Coolant pump 4
2 B445*1B
B6279
Characteristic map thermostat
2
1 M251*1B
M_LIN_8
0.35
WS
31
0.75
BR
Z50*1B
1 B445*1B
T_KFK
0.5
WS
60 A46*2B
15 A46*3B
31
15
15
A46
Digital Motor Electronics
1 A46*1B
25 A46*2B
A_TKA
0.35
BL/GE
A_TMOT
0.35
WS
1 X2458*1B
1 B90*1B
B90
Temperature sensor at radiator outlet
1 B291*1B
B441
Coolant temperature sensor
2 B90*1B
2 B291*1B
2 X2458*1B
M_TKA
0.35
SW/BL
M_TMOT
0.35
SW/GR
7 A46*1B
30 A46*2B
A46
Digital Motor Electronics
31
15
A45
Digital Motor Electronics 2
25 A45*1B
A_THKR
0.35
SW/GR
1 B90*2B
B90a
Coolant temperature sensor, heater return
2 B90*2B
M_THKR
0.35
SW/BL
31 A45*1B
A45
Digital Motor Electronics 2
31