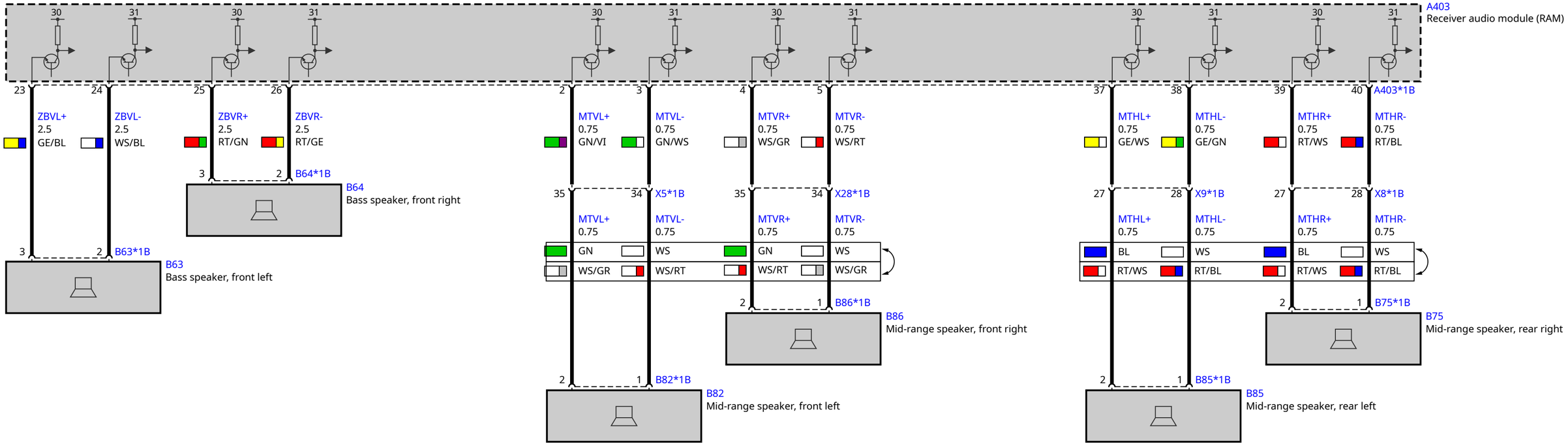
A403
Receiver audio module (RAM)
30
31
23
24
25
26
2
3
4
5
37
38
39
40
A403*1B
ZBVL+
2.5
GE/BL
ZBVL-
2.5
WS/BL
ZBVR+
2.5
RT/GN
ZBVR-
2.5
RT/GE
MTVL+
0.75
GN/VI
MTVL-
0.75
GN/WS
MTVR+
0.75
WS/GR
MTVR-
0.75
WS/RT
MTHL+
0.75
GE/WS
MTHL-
0.75
GE/GN
MTHR+
0.75
RT/WS
MTHR-
0.75
RT/BL
B64*1B
B64
Bass speaker, front right
X5*1B
X28*1B
X9*1B
X8*1B
35
34
27
28
GN
WS
WS/GR
WS/RT
BL
RT/WS
RT/BL
B63*1B
B63
Bass speaker, front left
B86*1B
B86
Mid-range speaker, front right
B75*1B
B75
Mid-range speaker, rear right
B82*1B
B82
Mid-range speaker, front left
B85*1B
B85
Mid-range speaker, rear left
1