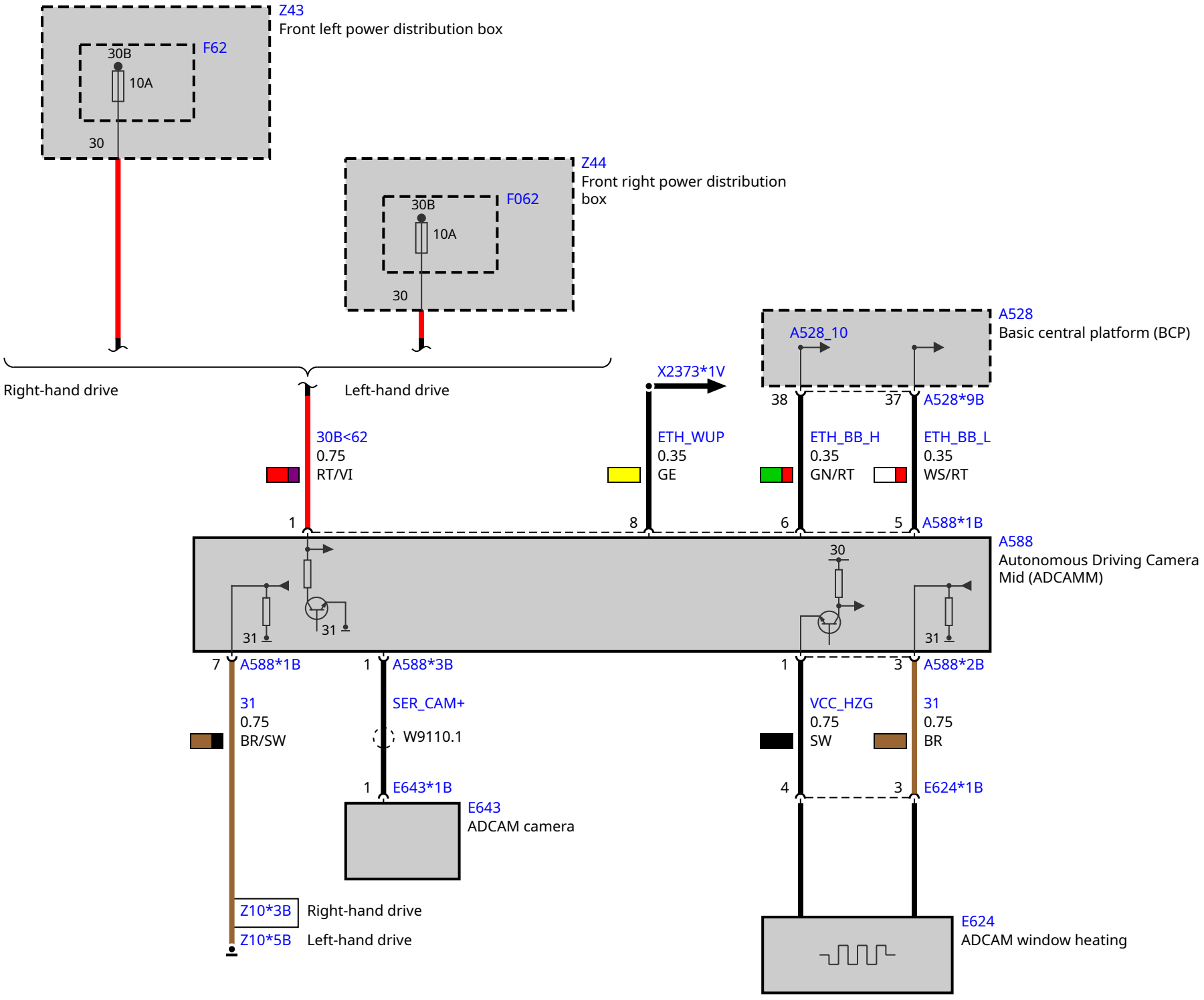
Z43
Front left power distribution box
F62
30B
10A
30
Z44
Front right power distribution box
F062
30B
10A
30
Right-hand drive
Left-hand drive
A528
Basic central platform (BCP)
A528_10
X2373*1V
38
37
A528*9B
30B<62
0.75
RT/VI
ETH_WUP
0.35
GE
ETH_BB_H
0.35
GN/RT
ETH_BB_L
0.35
WS/RT
1
8
6
5
A588*1B
A588
Autonomous Driving Camera Mid (ADCAMM)
30
31
31
31
7
A588*1B
1
A588*3B
1
3
A588*2B
31
0.75
BR/SW
SER_CAM+
W9110.1
VCC_HZG
0.75
SW
31
0.75
BR
1
E643*1B
4
3
E624*1B
E643
ADCAM camera
Z10*3B
Right-hand drive
Z10*5B
Left-hand drive
E624
ADCAM window heating