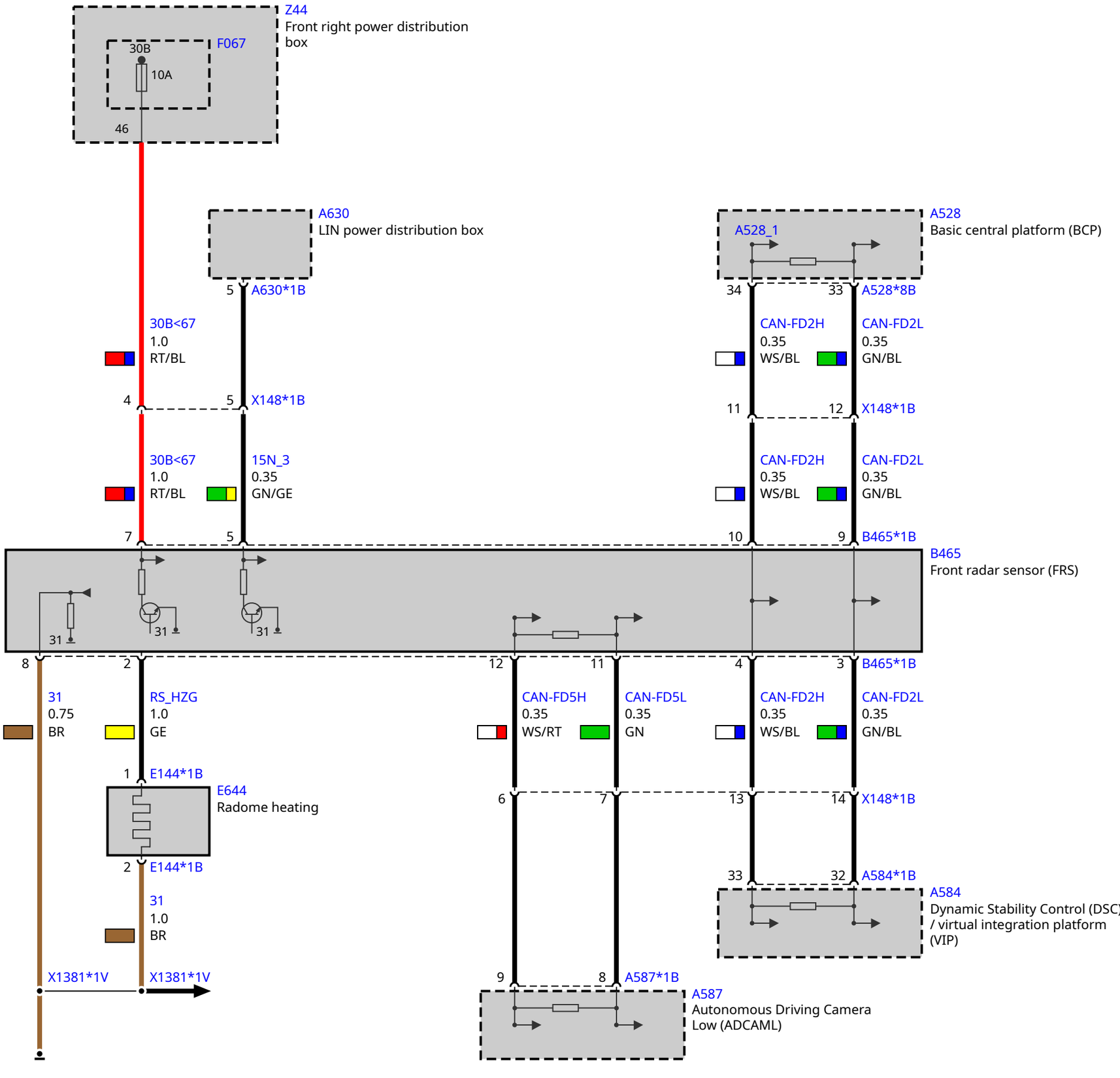
Z44
Front right power distribution box
F067
30B
10A
46
A630
LIN power distribution box
5
A630*1B
30B<67
1.0
RT/BL
4
5
X148*1B
30B<67
1.0
RT/BL
15N_3
0.35
GN/GE
7
5
A528
Basic central platform (BCP)
A528_1
34
33
A528*8B
CAN-FD2H
0.35
WS/BL
CAN-FD2L
0.35
GN/BL
11
12
X148*1B
CAN-FD2H
0.35
WS/BL
CAN-FD2L
0.35
GN/BL
10
9
B465*1B
B465
Front radar sensor (FRS)
31
31
31
8
2
12
11
4
3
B465*1B
31
0.75
BR
RS_HZG
1.0
GE
CAN-FD5H
0.35
WS/RT
CAN-FD5L
0.35
GN
CAN-FD2H
0.35
WS/BL
CAN-FD2L
0.35
GN/BL
1
E144*1B
E644
Radome heating
6
7
13
14
X148*1B
2
E144*1B
31
1.0
BR
33
32
A584*1B
A584
Dynamic Stability Control (DSC) / virtual integration platform (VIP)
X1381*1V
X1381*1V
9
8
A587*1B
A587
Autonomous Driving Camera Low (ADCAML)