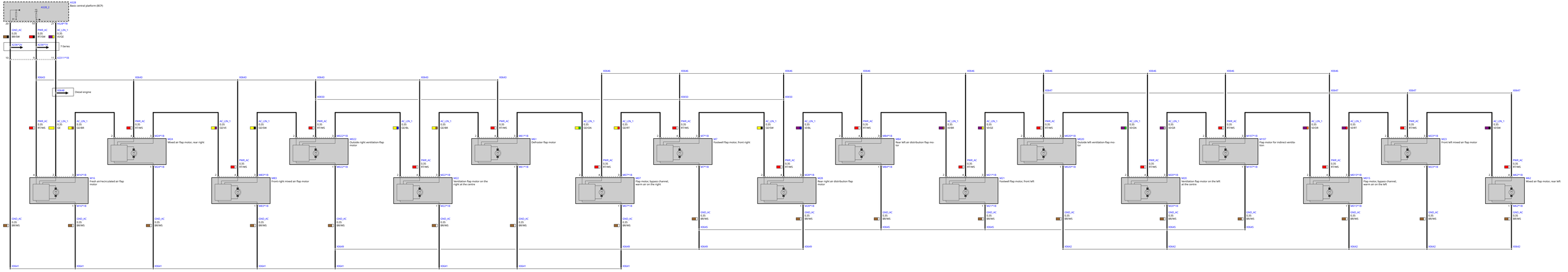
A52B
Basic central platform (BCP)
A52B_2
20
19
18
17
GND_AC
0.35
BR/SW
PWR_AC
0.35
RT/SW
AC_LIN_1
0.35
WH/GE
X2201*1G
X2201*1G
7-Series
10
1
X2211*1B
X0643
X0643
X0643
X0643
X0643
X0646
X0646
X0646
X0646
X0646
X0646
X0646
X0646
X0647
X0647
X0647
X0648
Diesel engine
X0650
X0650
X0650
PWR_AC
0.35
RT/WS
AC_LIN_1
0.35
GE
AC_LIN_1
0.35
GE/BR
AC_LIN_1
0.35
GE/VI
AC_LIN_1
0.35
GE/SW
AC_LIN_1
0.35
GE/BL
AC_LIN_1
0.35
GE/GN
AC_LIN_1
0.35
GE/RT
AC_LIN_1
0.35
VI/BL
AC_LIN_1
0.35
VI/SW
AC_LIN_1
0.35
VI/GE
AC_LIN_1
0.35
VI/GN
AC_LIN_1
0.35
VI/GR
AC_LIN_1
0.35
VI/OR
AC_LIN_1
0.35
VI/RT
AC_LIN_1
0.35
VI/SW
M24*1B
M24
Mixed air flap motor, rear right
M22*1B
M22
Outside right ventilation flap motor
M11*1B
M11
Defroster flap motor
M7*1B
M7
Footwell flap motor, front right
M8*1B
M8
Rear left air distribution flap motor
M21*1B
M21
Footwell flap motor, front left
M20*1B
M20
Outside left ventilation flap motor
M19*1B
M19
Flap motor for indirect ventilation
M23*1B
M23
Front left mixed air flap motor
M16*1B
M16
Fresh air/recirculated air flap motor
M18*1B
M18
Front right mixed air flap motor
M27*1B
M27
Ventilation flap motor on the right at the centre
M17*1B
M17
Flap motor, bypass channel, warm air on the right
M28*1B
M28
Rear right air distribution flap motor
M20*1B
M20
Ventilation flap motor on the left at the centre
M15*1B
M15
Flap motor, bypass channel, warm air on the left
M26*1B
M26
Mixed air flap motor, rear left
GND_AC
0.35
BR/WS
X0649
X0645
X0642
X0641