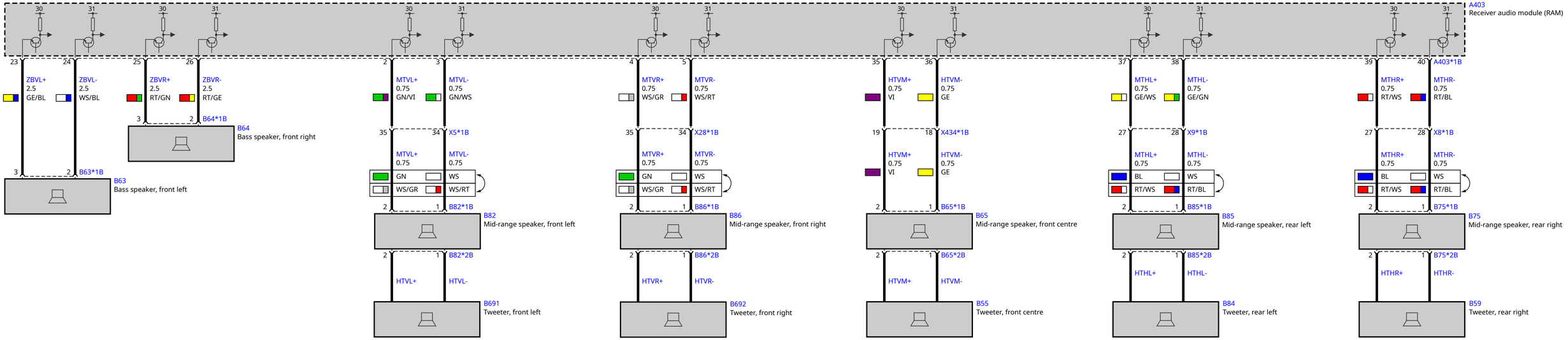
A403
Receiver audio module (RAM)
30
31
23
24
ZBVL+
2.5
GE/BL
ZBVL-
2.5
WS/BL
3
2
B63*1B
B63
Bass speaker, front left
25
26
ZBVR+
2.5
RT/GN
ZBVR-
2.5
RT/GE
3
2
B64*1B
B64
Bass speaker, front right
2
3
MTVL+
0.75
GN/VI
MTVL-
0.75
GN/WS
35
34
X5*1B
MTVL+
0.75
MTVL-
0.75
GN
WS
WS/GR
WS/RT
2
1
B82*1B
B82
Mid-range speaker, front left
2
1
B82*2B
HTVL+
HTVL-
B691
Tweeter, front left
4
5
MTVR+
0.75
WS/GR
MTVR-
0.75
WS/RT
35
34
X28*1B
MTVR+
0.75
MTVR-
0.75
GN
WS
WS/GR
WS/RT
2
1
B86*1B
B86
Mid-range speaker, front right
2
1
B86*2B
HTVR+
HTVR-
B692
Tweeter, front right
35
36
HTVM+
0.75
VI
HTVM-
0.75
GE
19
18
X434*1B
HTVM+
0.75
VI
HTVM-
0.75
GE
2
1
B65*1B
B65
Mid-range speaker, front centre
2
1
B65*2B
HTVM+
HTVM-
B55
Tweeter, front centre
37
38
MTHL+
0.75
GE/WS
MTHL-
0.75
GE/GN
27
28
X9*1B
MTHL+
0.75
MTHL-
0.75
BL
WS
RT/WS
RT/BL
2
1
B85*1B
B85
Mid-range speaker, rear left
2
1
B85*2B
HTHL+
HTHL-
B84
Tweeter, rear left
39
40
A403*1B
MTHR+
0.75
RT/WS
MTHR-
0.75
RT/BL
27
28
X8*1B
MTHR+
0.75
MTHR-
0.75
BL
WS
RT/WS
RT/BL
2
1
B75*1B
B75
Mid-range speaker, rear right
2
1
B75*2B
HTHR+
HTHR-
B59
Tweeter, rear right