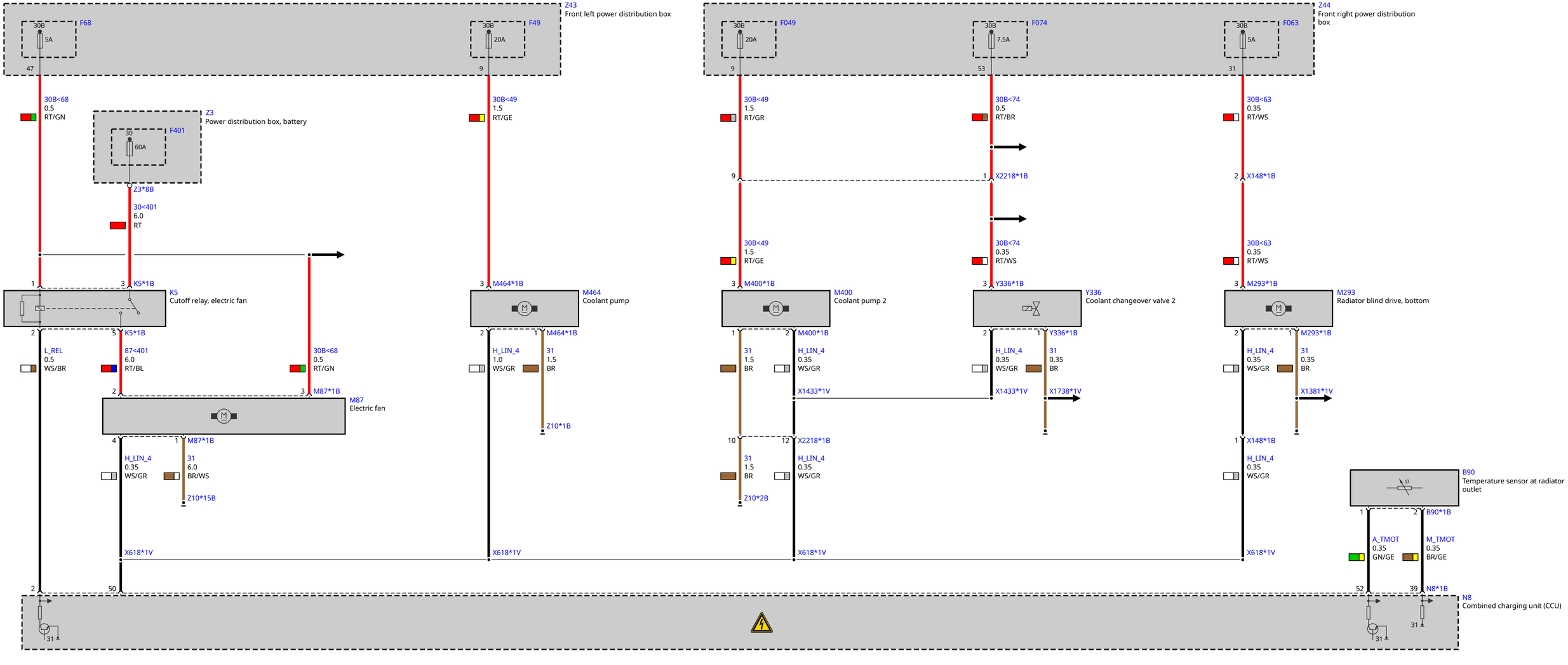
Z43
Front left power distribution box
30B
F68
5A
47
30B
F49
20A
9
Z44
Front right power distribution box
30B
F049
20A
9
30B
F074
7.5A
53
30B
F063
5A
31
30B<68
0.5
RT/GN
Z3
Power distribution box, battery
30
F401
60A
Z3*8B
30<401
6.0
RT
30B<49
1.5
RT/GE
30B<49
1.5
RT/GR
30B<74
0.5
RT/BR
X2218*1B
30B<63
0.35
RT/WS
X148*1B
30B<49
1.5
RT/GE
30B<74
0.35
RT/WS
30B<63
0.35
RT/WS
1
3
K5*1B
K5
Cutoff relay, electric fan
3
M464*1B
M464
Coolant pump
3
M400*1B
M400
Coolant pump 2
3
Y336*1B
Y336
Coolant changeover valve 2
3
M293*1B
M293
Radiator blind drive, bottom
2
5
K5*1B
L_REL
0.5
WS/BR
87<401
6.0
RT/BL
30B<68
0.5
RT/GN
2
1
M464*1B
H_LIN_4
1.0
WS/GR
31
1.5
BR
Z10*1B
1
2
M400*1B
31
1.5
BR
H_LIN_4
0.35
WS/GR
X1433*1V
2
1
Y336*1B
H_LIN_4
0.35
WS/GR
31
0.35
BR
X1433*1V
X1738*1V
2
1
M293*1B
H_LIN_4
0.35
WS/GR
31
0.35
BR
X1381*1V
2
3
M87*1B
M87
Electric fan
4
1
M87*1B
H_LIN_4
0.35
WS/GR
31
6.0
BR/WS
Z10*15B
10
12
X2218*1B
31
1.5
BR
H_LIN_4
0.35
WS/GR
Z10*2B
1
X148*1B
H_LIN_4
0.35
WS/GR
B90
Temperature sensor at radiator outlet
1
2
B90*1B
A_TMOT
0.35
GN/GE
M_TMOT
0.35
BR/GE
X618*1V
X618*1V
X618*1V
X618*1V
2
50
52
39
N8*1B
N8
Combined charging unit (CCU)
31
31
31