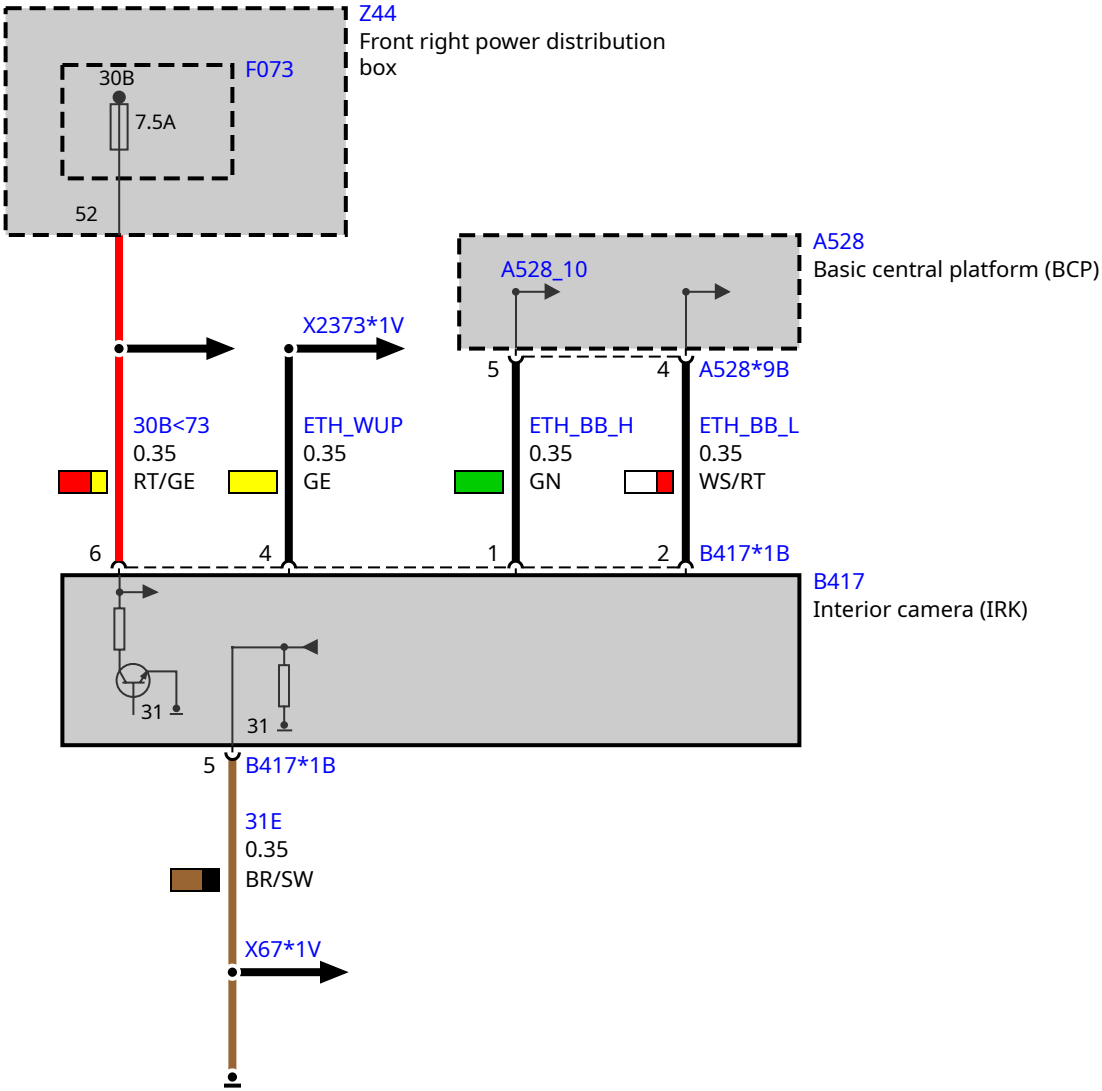
Z44
Front right power distribution box
F073
30B
7.5A
52
A528
Basic central platform (BCP)
A528_10
X2373*1V
5
4
A528*9B
30B<73
0.35
RT/GE
ETH_WUP
0.35
GE
ETH_BB_H
0.35
GN
ETH_BB_L
0.35
WS/RT
6
4
1
2
B417*1B
B417
Interior camera (IRK)
31
31
5
B417*1B
31E
0.35
BR/SW
X67*1V