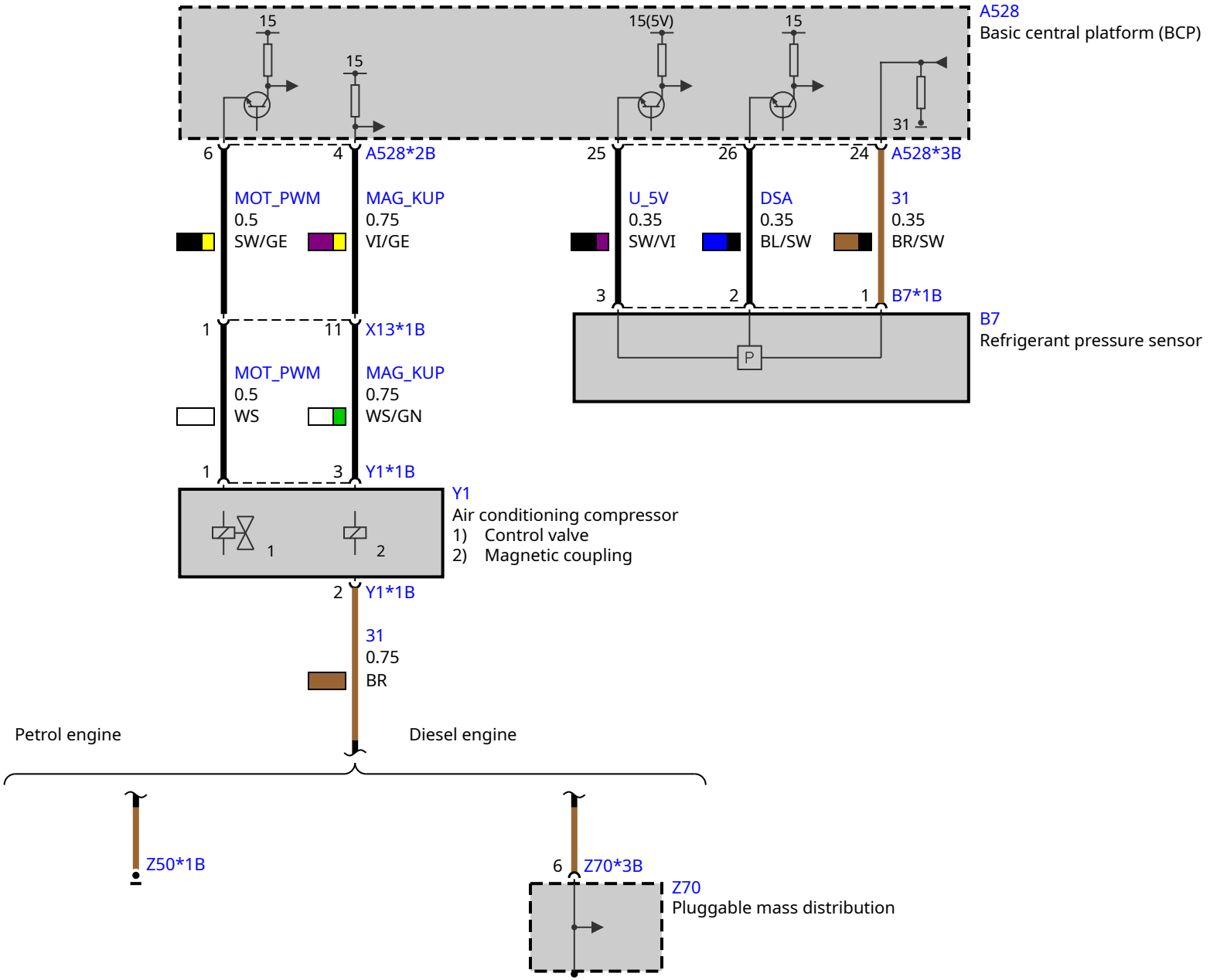
A528
Basic central platform (BCP)
15
15
15(5V)
15
31
6
4
A528*2B
25
26
24
A528*3B
MOT_PWM
0.5
SW/GE
MAG_KUP
0.75
VI/GE
U_5V
0.35
SW/VI
DSA
0.35
BL/SW
31
0.35
BR/SW
3
2
1
B7*1B
B7
Refrigerant pressure sensor
P
1
11
X13*1B
MOT_PWM
0.5
WS
MAG_KUP
0.75
WS/GN
1
3
Y1*1B
Y1
Air conditioning compressor
1) Control valve
2) Magnetic coupling
1
2
2
Y1*1B
31
0.75
BR
Petrol engine
Diesel engine
Z50*1B
6
Z70*3B
Z70
Pluggable mass distribution