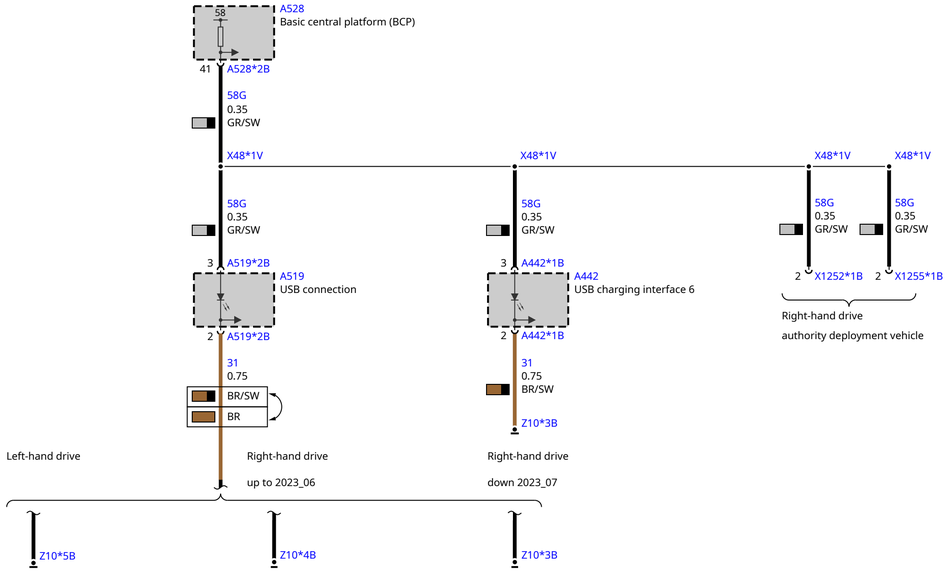
A528
Basic central platform (BCP)
58
41
A528*2B
58G
0.35
GR/SW
X48*1V
X48*1V
X48*1V
X48*1V
58G
0.35
GR/SW
58G
0.35
GR/SW
58G
0.35
GR/SW
58G
0.35
GR/SW
3
A519*2B
A519
USB connection
3
A442*1B
A442
USB charging interface 6
2
X1252*1B
2
X1255*1B
Right-hand drive
authority deployment vehicle
2
A519*2B
2
A442*1B
31
0.75
BR/SW
BR
31
0.75
BR/SW
Z10*3B
Left-hand drive
Right-hand drive
up to 2023_06
Right-hand drive
down 2023_07
Z10*5B
Z10*4B
Z10*3B

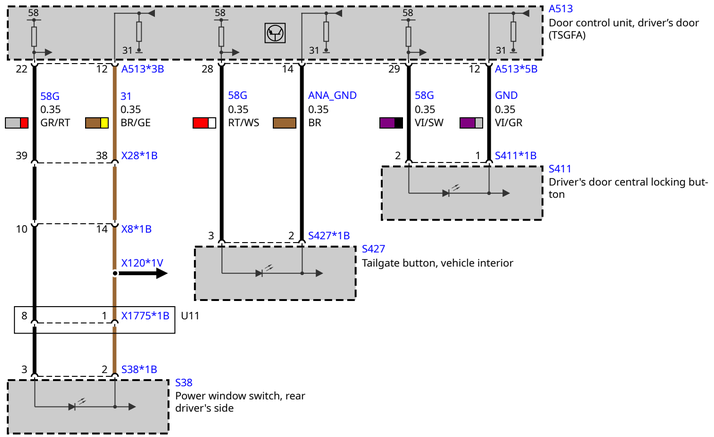
A513
Door control unit, driver's door (TSGFA)
58
58
58
31
31
31
22
12
A513*3B
28
14
29
12
A513*5B
58G
0.35
GR/RT
31
0.35
BR/GE
58G
0.35
RT/WS
ANA_GND
0.35
BR
58G
0.35
VI/SW
GND
0.35
VI/GR
39
38
X28*1B
2
1
S411*1B
S411
Driver's door central locking button
10
14
X8*1B
3
2
S427*1B
S427
Tailgate button, vehicle interior
X120*1V
8
1
X1775*1B
U11
3
2
S38*1B
S38
Power window switch, rear driver's side

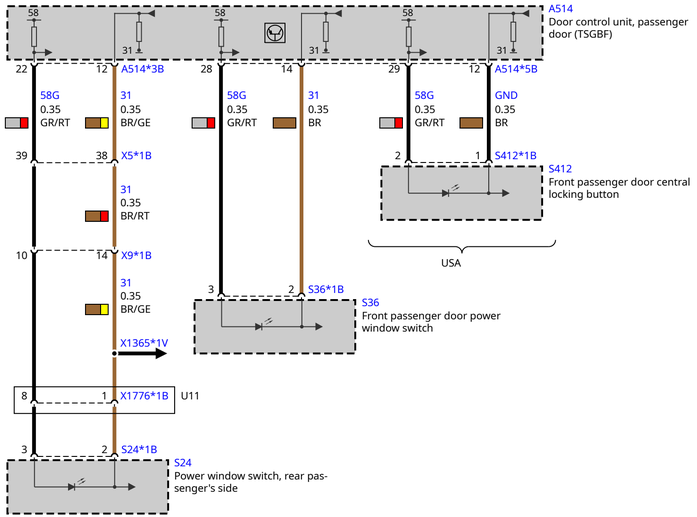
A514
Door control unit, passenger door (TSGBF)
58
58
58
31
31
31
22
12
A514*3B
28
14
29
12
A514*5B
58G
0.35
GR/RT
31
0.35
BR/GE
58G
0.35
GR/RT
31
0.35
BR
58G
0.35
GR/RT
GND
0.35
BR
39
38
X5*1B
2
1
S412*1B
S412
Front passenger door central locking button
31
0.35
BR/RT
10
14
X9*1B
USA
31
0.35
BR/GE
3
2
S36*1B
S36
Front passenger door power window switch
X1365*1V
8
1
X1776*1B
U11
3
2
S24*1B
S24
Power window switch, rear passenger's side